YASKAWA

A World of Automation Solutions™

VARISPEED-F7
Instruction Manual

MODEL: CIMR-F7A
200V CLASS 0.4 to 110kW
400V CLASS 0.4 to 18.5kW

Upon receipt of the product and prior to initial operation, read these instructions thoroughly, and retain for future reference.

⚠ WARNING

YASKAWA manufactures component parts that can be used in a wide variety of industrial applications. The selection and application of YASKAWA products remain the responsibility of the equipment designer or end user. YASKAWA accepts no responsibility for the way its products are incorporated into the final system design.

Under no circumstances should any YASKAWA product be incorporated into any product or design as the exclusive or sole safety control. Without exception, all controls should be designed to detect faults dynamically and fail safely under all circumstances. All products designed to incorporate a component part manufactured by YASKAWA must be supplied to the end user with appropriate warnings and instructions as to that part's safe use and operation. Any warnings provided by YASKAWA must be promptly provided to the end user.

YASKAWA offers an express warranty only as to the quality of its products in conforming to standards and specifications published in YASKAWA's manual. NO OTHER WARRANTY, EXPRESS OR IMPLIED, IS OFFERED. YASKAWA assumes no liability for any personal injury, property damage, losses, or claims arising from misapplication of its products.

Preface

This manual is designed to ensure correct and suitable application of Varispeed F7-Series Inverters. Read this manual before attempting to install, operate, maintain, or inspect an Inverter and keep it in a safe, convenient location for future reference. Before you understand all precautions and safety information before attempting application.

General Precautions

- The diagrams in this manual may be indicated without covers or safety shields to show details. Be sure to restore covers or shields before operating the Units and run the Units according to the instructions described in this manual.
- Any illustrations, photographs, or examples used in this manual are provided as examples only and may not apply to all products to which this manual is applicable.
- The products and specifications described in this manual or the content and presentation of the manual may be changed without notice to improve the product and/or the manual.
- When ordering a new copy of the manual due to damage or loss, contact your Yaskawa representatives or the nearest Yaskawa sales office and provide the manual number shown on the front cover.
- If nameplates become warn or damaged, order new ones from your Yaskawa representatives or the nearest Yaskawa sales office.

Safety Information

The following conventions are used to indicate precautions in this manual. Failure to heed precautions provided in this manual can result in serious or possibly even fatal injury or damage to the products or to related equipment and systems.

WARNING

Indicates precautions that, if not heeded, could possibly result in loss of life or serious injury.

CAUTION

Indicates precautions that, if not heeded, could result in relatively serious or minor injury, damage to the product, or faulty operation.

Failure to heed a precaution classified as a caution can result in serious consequences depending on the situation.

IMPORTANT

Indicates important information that should be followed.

Safety Precautions

■ Confirmations upon Delivery

⚠ CAUTION

- Never install an Inverter that is damaged or missing components.
  Doing so can result in injury.

■ Installation

⚠ CAUTION

- Always hold the case when carrying the Inverter.
  If the Inverter is held by the front cover, the main body of the Inverter may fall, possibly resulting in injury.
- Attach the Inverter to a metal or other non-flammable material.
  Fire can result if the Inverter is attached to a flammable material.
- Install a cooling fan or other cooling device when installing more than one Inverter in the same enclosure so that the temperature of the air entering the Inverters is below 45°C.
  Overheating can result in fires or other accidents.

■ Wiring

⚠ WARNING

- Always turn OFF the input power supply before wiring terminals.
  Otherwise, an electric shock or fire can occur.
- Wiring must be performed by an authorized person qualified in electrical work.
  Otherwise, an electric shock or fire can occur.
- Be sure to ground the ground terminal. (200 V class: Ground to 100 Ω or less, 400 V class: Ground to 10 Ω or less)
  Otherwise, an electric shock or fire can occur.
- Always check the operation of any emergency stop circuits after they are wired.
  Otherwise, there is the possibility of injury. (Wiring is the responsibility of the user.)
- Never touch the output terminals directly with your hands or allow the output lines to come into contact with the Inverter case. Never short the output lines.
  Otherwise, an electric shock or ground short can occur.

⚠ CAUTION

- Check to be sure that the voltage of the main AC power supply satisfies the rated voltage of the Inverter.
  Injury or fire can occur if the voltage is not correct.
- Do not perform voltage withstand tests on the Inverter.
  Otherwise, semiconductor elements and other devices can be damaged.
- Connect braking resistors, Braking Resistor Units, and Braking Units as shown in the I/O wiring examples.
  Otherwise, a fire may occur.

⚠ CAUTION

- Tighten all terminal screws to the specified tightening torque.
  Otherwise, a fire may occur.
- Do not connect AC power to output terminals U, V, and W.
  The interior parts of the Inverter will be damaged if voltage is applied to the output terminals.
- Do not connect phase-advancing capacitors or LC/RC noise filters to the output circuits.
  The Inverter can be damaged or internal parts burnt if these devices are connected.
- Do not connect electromagnetic switches or contactors to the output circuits.
  If a load is connected while the Inverter is operating, surge current will cause the over current protection circuit inside the Inverter to operate.

■ Setting User Constants

⚠ CAUTION

- Disconnect the load (machine, device) from the motor before performing rotational auto tuning.
  The motor may turn, possibly resulting in injury or damage to equipment. Also, motor constants cannot be correctly set with the motor attached to a load.
- Stay clear of the motor during autotuning.
  The motor may start operating suddenly, possibly resulting in injury.

■ Test Run

⚠ WARNING

- Check to be sure that the front cover is attached before turning ON the power supply. Do not remove the front cover while the power is applied.
  An electric shock may occur.
- Do not come close to the machine when the fault reset function is used. If the alarmed is cleared, the machine may start moving suddenly.
  Also, design the machine so that human safety is ensured even when it is restarted.
  Injury may occur.
- Provide a separate emergency stop switch; the Digital Operator STOP Key is valid only when its function is set.
  Injury may occur.
- Reset alarms only after confirming that the RUN signal is OFF.
  Injury may occur.

⚠ CAUTION

- Don't touch the radiation fins (heatsink), braking resistor, or Braking Resistor Unit. These can become very hot.
  Otherwise, a burn injury may occur.
- Be sure that the motor and machine is within the applicable operation ranges before starting operation.
  Otherwise, an injury may occur.
- Provide a separate holding brake if necessary.
  Otherwise, an injury may occur.

⚠ CAUTION

- Don't check signals while the Inverter is running.
  Otherwise, the equipment may be damaged.
- Be careful when changing Inverter settings. The Inverter is factory set to suitable settings.
  Otherwise, the equipment may be damaged.

■ Maintenance and Inspection

⚠ WARNING

- Do not touch the Inverter terminals. Terminals carry high voltages and are extremely dangerous.
  Doing so can result in electric shock.
- Always have the protective cover in place when power is being supplied to the Inverter. Always turn OFF power to the Inverter through the MCCB before removing the cover.
  Otherwise electric shock can occur.
- After turning OFF the main circuit power supply, wait until the CHARGE indicator light goes out before performing maintenance or inspections.
  The capacitor will remain charged and is dangerous.
- Maintenance, inspection, and replacement of parts must be performed only by authorized personnel.
  Remove all metal objects, such as watches and rings, before starting work. Always use insulated tools.
  Failure to heed these warning can result in electric shock.

⚠ CAUTION

- A CMOS IC is used in the control board. Handle the control board and CMOS IC carefully.
  The CMOS IC can be destroyed by static electricity if touched directly.
- Do not change the wiring, or remove connectors or the Digital Operator, during operation.
  Doing so can result in injury.

■ Other

⚠ WARNING

- Never attempt to modify or alter the Inverter.
  Doing so can result in electrical shock or injury.

Warning Information and Position

Warning information is printed in the position shown in the following illustration. Always follow the warnings.

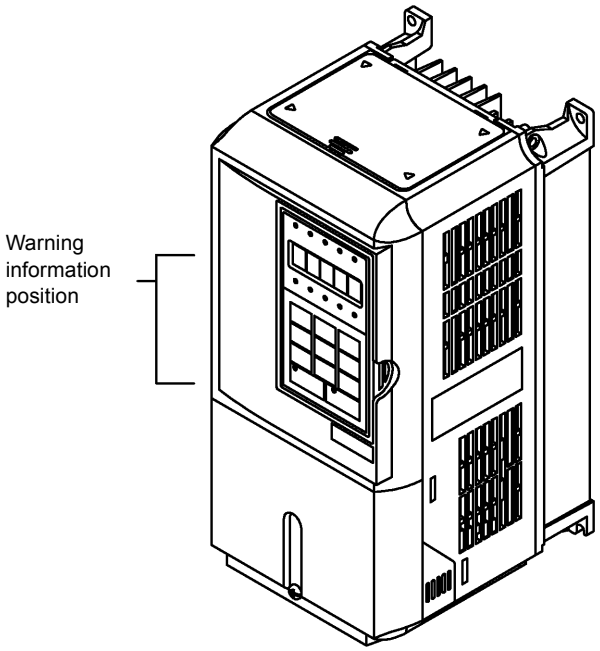

Illustration shows the CIMR-F7A20P4

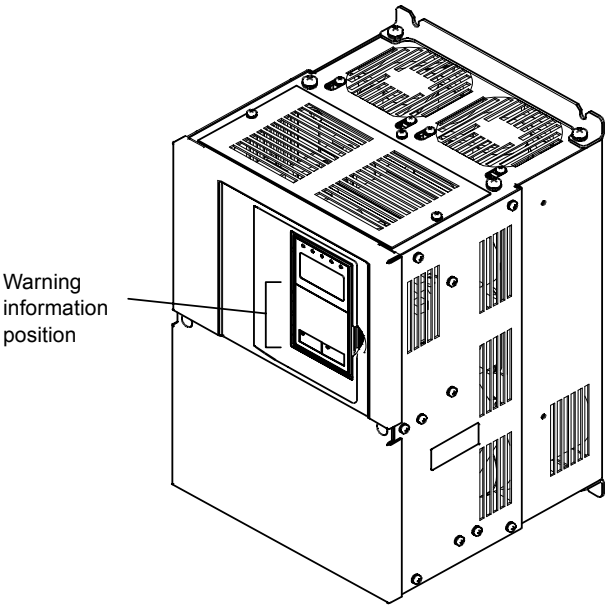

Illustration shows the CIMR-F7A2022

Warning Information

⚠ WARNING

⚠ Risk of electric shock.

- Read manual before installing.
- Wait 5 minutes for capacitor discharge after disconnecting power supply.

⚠ AVERTISSEMENT

⚠ Risque de décharge électrique.

- Lire le manuel avant l' installation.
- Attendre 5 minutes aprés la coupure de l' allmentation. Pour permettre la décharge des condensateurs.

⚠ 危険

⚠ けが・感電のおそれがあります。

- 据え付け・運転の前には必ず取扱説明書をお読み下さい。
- 通電中及び電源遮断後5分以内はフロントカバーを外さないで下さい。

Registered Trademarks

The following registered trademarks are used in this manual.

- DeviceNet is a registered trademark of the ODVA (Open DeviceNet Vendors Association, Inc.).
- InterBus is a registered trademark of Phoenix Contact Co.
- ControlNet is a registered trademark of ControlNet International, Ltd.
- LONworks is a registered trademark of the Echolon.

Contents

1

Handling Inverters

This chapter describes the checks required upon receiving or installing an Inverter.

Varispeed F7 Introduction

◆ Varispeed F7 Applications

The Varispeed F7 is ideal for the following applications.

- Fan, blower, and pump applications
- Conveyors, pushers, metal tooling machines, etc.

Settings must be adjusted to the application for optimum operation. Refer to *Chapter 4 Test Run.*

◆ Varispeed F7 Models

The Varispeed-F7 Series include two voltage classes: 200 V and 400 V. Maximum motor capacities vary from 0.4 to 300 kW (41 models).

Table 1.1 Varispeed F7 Models

Voltage Class	Maximum Motor Capacity kW	Varispeed F7		Order Model Number (Always specify the protective structure when ordering.)	
		Output Capacity kVA	Basic Model Number	Open Chassis (IEC IP00) CIMR-F7□□□□□□	Enclosed Wall-mounted (IEC IP20, Type 1 (NEMA 1)) CIMR-F7A□□□□□□
200 V class	0.4	1.2	CIMR-F7A20P4	Remove the top and bottom covers from the Enclosed Wall-mounted model.	20P41□
	0.75	1.6	CIMR-F7A20P7		20P71□
	1.5	2.7	CIMR-F7A21P5		21P51□
	2.2	3.7	CIMR-F7A22P2		22P21□
	3.7	5.7	CIMR-F7A23P7		23P71□
	5.5	8.8	CIMR-F7A25P5		25P51□
	7.5	12	CIMR-F7A27P5		27P51□
	11	17	CIMR-F7A2011		20111□
	15	22	CIMR-F7A2015		20151□
	18.5	27	CIMR-F7A2018	20220□	20181□
	22	32	CIMR-F7A2022		20221□
	30	44	CIMR-F7A2030	20300□	20301□
	37	55	CIMR-F7A2037	20370□	20371□
	45	69	CIMR-F7A2045	20450□	20451□
	55	82	CIMR-F7A2055	20550□	20551□
	75	110	CIMR-F7A2075	20750□	20751□
	90	130	CIMR-F7A2090	20900□	-
	110	160	CIMR-F7A2110	21100□	-

Voltage Class	Maximum Motor Capacity kW	Varispeed F7		Order Model Number (Always specify the protective structure when ordering.)	
		Output Capacity kVA	Basic Model Number	Open Chassis (IEC IP00) CIMR-F7□□□□□□	Enclosed Wall-mounted (IEC IP20, Type 1 (NEMA 1)) CIMR-F7A□□□□□□
400 V class	0.4	1.4	CIMR-F7A40P4	Remove the top and bottom covers from the Enclosed Wall-mount model.	40P41□
	0.75	1.6	CIMR-F7A40P7		40P71□
	1.5	2.8	CIMR-F7A41P5		41P51□
	2.2	4.0	CIMR-F7A42P2		42P21□
	3.7	5.8	CIMR-F7A43P7		43P71□
	5.5	9.5	CIMR-F7A45P5		45P51□
	7.5	13	CIMR-F7A47P5		47P51□
	11	18	CIMR-F7A4011		40111□
	15	24	CIMR-F7A4015		40151□
	18.5	30	CIMR-F7A4018	40220□	40181□
	22	34	CIMR-F7A4022		40221□
	30	46	CIMR-F7A4030	40300□	40301□
	37	57	CIMR-F7A4037	40370□	40371□
	45	69	CIMR-F7A4045	40450□	40451□
	55	85	CIMR-F7A4055	40550□	40551□
	75	110	CIMR-F7A4075	40750□	40751□
	90	140	CIMR-F7A4090	40900□	40901□
	110	160	CIMR-F7A4110	41100□	41101□
	132	200	CIMR-F7A4132	41320□	41321□
	160	230	CIMR-F7A4160	41600□	41601□
	185	280	CIMR-F7A4185	41850□	-
	220	390	CIMR-F7A4220	42200□	-
	300	510	CIMR-F7A4300	43000□	-

Confirmations upon Delivery

◆ Checks

Check the following items as soon as the Inverter is delivered.

Table 1.2 Checks

Item	Method
Has the correct model of Inverter been delivered?	Check the model number on the nameplate on the side of the Inverter.
Is the Inverter damaged in any way?	Inspect the entire exterior of the Inverter to see if there are any scratches or other damage resulting from shipping.
Are any screws or other components loose?	Use a screwdriver or other tools to check for tightness as required.

If you find any irregularities in the above items, contact the agency from which you purchased the Inverter or your Yaskawa representative immediately.

◆ Nameplate Information

There is a nameplate attached to the side of each Inverter. The nameplate shows the model number, specifications, lot number, serial number, and other information on the Inverter.

■ Example Nameplate

The following nameplate is an example for a standard domestic (Japan) Inverter: 3-phase, 200 VAC, 0.4 kW, IEC IP20 and Type 1 (NEMA 1) standards

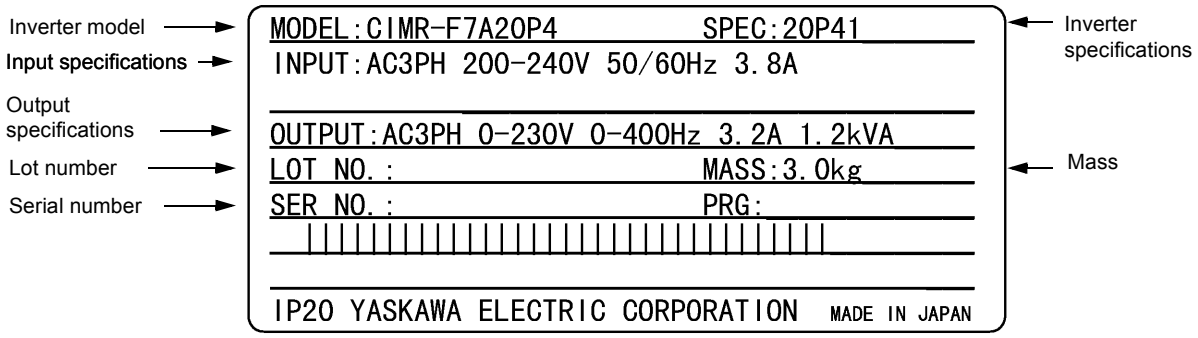

Fig 1.1 Nameplate

■Inverter Model Numbers

The model number of the Inverter on the nameplate indicates the specification, voltage class, and maximum motor capacity of the Inverter in alphanumeric codes.

CIMR - F7 A 2 0P4

Inverter

Varispeed F7

No.	Specification
A	Standard domestic model

No.	Voltage Class
2	AC input, 3-phase, 200 V
4	AC input, 3-phase, 400 V

No.	Max. Motor Capacity
0P4	0.4 kW
0P7 to 300	0.75 kW to 300 kW*

"P" indicates the decimal point.

* The following Inverters are under development:
400 V class, 185 to 300 kW

Fig 1.2 Inverter Model Numbers

■Inverter Specifications

The Inverter specifications (“SPEC”) on the nameplate indicate the voltage class, maximum motor capacity, the protective structure, and the revision of the Inverter in alphanumeric codes.

2 0P4 1

No.	Voltage Class
2	AC input, 3-phase, 200 V
4	AC input, 3-phase, 400 V

No.	Max. Motor Capacity
0P4	0.4 kW
0P7 to 300	0.75 kW to 300 kW*

"P" indicates the decimal point.

No.	Protective Structure
0	Open chassis (IEC IP00)
1	Enclosed wall-mounted (IEC IP20, Type 1 (NEMA 1))

* The following Inverters are under development:
400 V class, 185 to 300 kW

Fig 1.3 Inverter Specifications

TERMS

Open Chassis Type (IEC IP00)

Protected so that parts of the human body cannot reach electrically charged parts from the front when the Inverter is mounted in a control panel.

Enclosed Wall-mounted Type (IEC IP20, Type 1 (NEMA 1))

The Inverter is structured so that the Inverter is shielded from the exterior, and can thus be mounted to the interior wall of a standard building (not necessarily enclosed in a control panel). The protective structure conforms to the standards of Type 1 (NEMA 1) in the USA.
Top protective cover (Fig. 1.4) has to be installed to confirm with IEC IP20 and Type 1 (NEMA 1) requirements.

◆ Component Names

■ Inverters of 18.5 kW or Less

The external appearance and component names of the Inverter are shown in *Fig 1.4*. The Inverter with the terminal cover removed is shown in *Fig 1.5*.

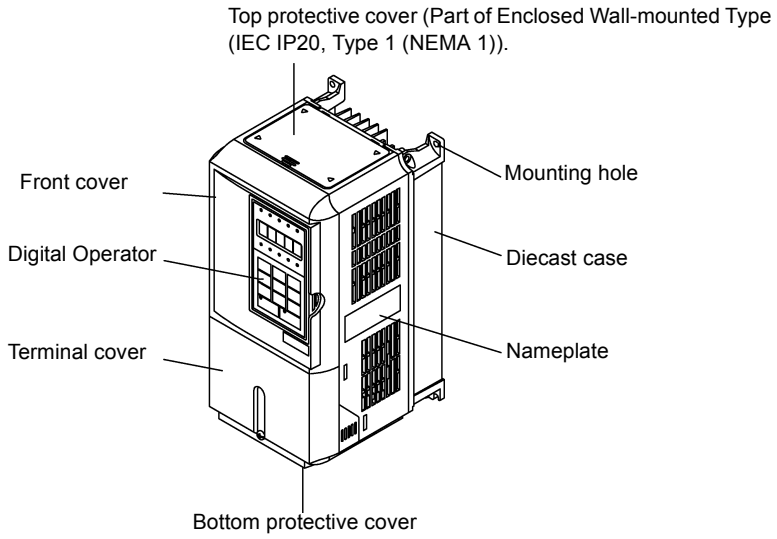

Fig 1.4 Inverter Appearance (18.5 kW or Less)

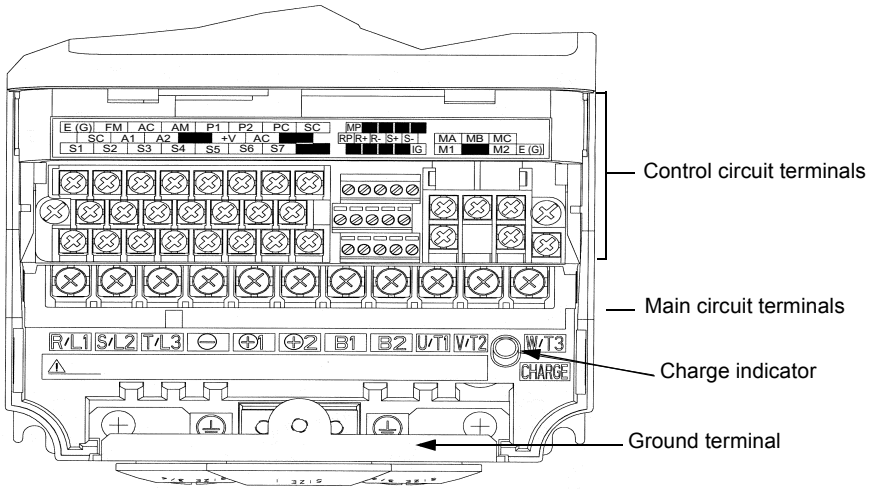

Fig 1.5 Terminal Arrangement (18.5 kW or Less)

■ Inverters of 22 kW or More

The external appearance and component names of the Inverter are shown in *Fig 1.6.* The Inverter with the terminal cover removed is shown in *Fig. 1.7.*

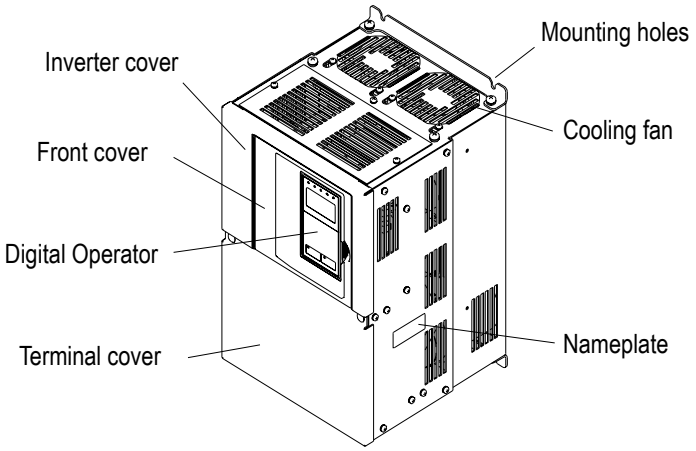

Fig 1.6 Terminal Arrangement (18.5 kW or Less)

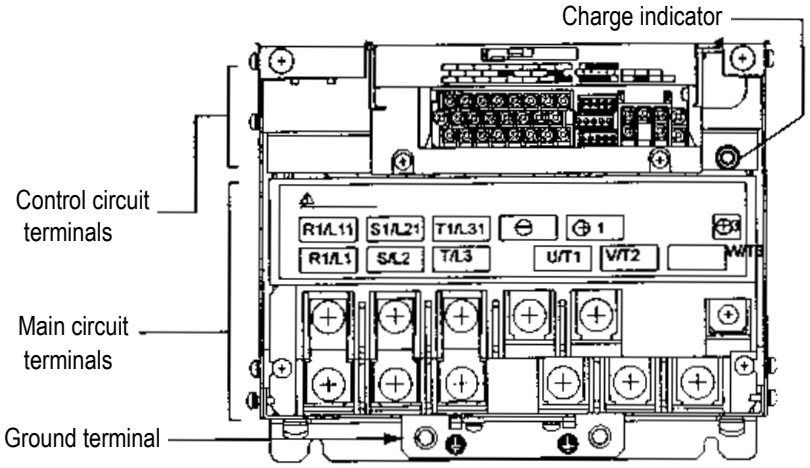

Fig 1.7 Terminal Arrangement (18.5 kW or Less)

Exterior and Mounting Dimensions

◆ Open Chassis Inverters (IP00)

Exterior diagrams of the Open Chassis Inverters are shown below.

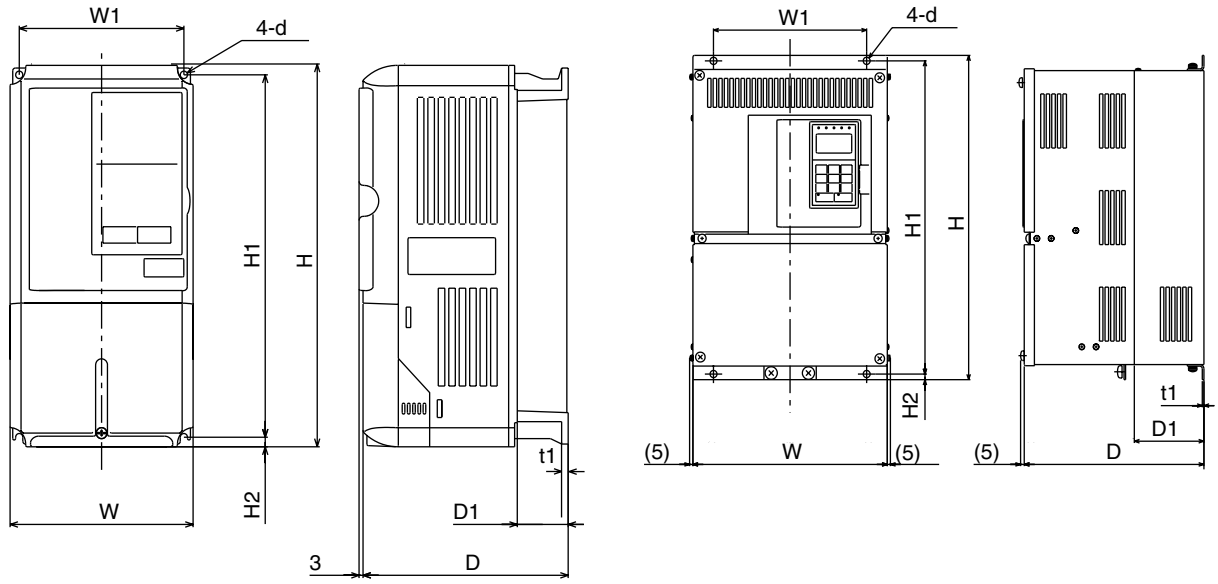

200 V/400 V Class Inverters of 0.4 to 18.5 kW

200 V Class Inverters of 22 or 30 kW
400 V Class Inverters of 22 to 55 kW

Fig 1.8 Exterior Diagrams of Open Chassis Inverters

◆ Enclosed Wall-mounted Inverters Type 1 (NEMA1)

Exterior diagrams of the Enclosed Wall-mounted Inverters (NEMA1) are shown below.

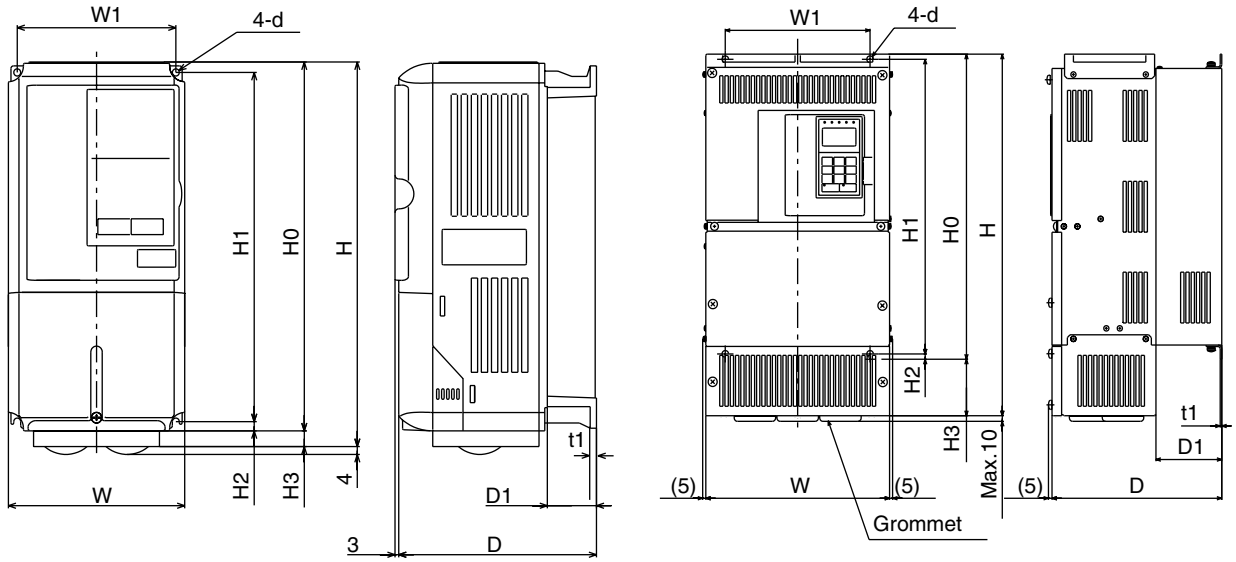

200 V/400 V Class Inverters of 0.4 to 18.5 kW

200 V Class Inverters of 22 or 30 kW
400 V Class Inverters of 22 to 55 kW

Fig 1.9 Exterior Diagrams of Enclosed Wall-mounted Inverters

Table 1.3 Inverter Dimensions (mm) and Masses (kg)

Voltage Class	Max. Applicable Motor Output [kW]	Dimensions (mm)																					Caloric Value (W)			Cooling Method
		Open Chassis (IP00)									Enclosed Wall-mounted (NEMA1)															
		W	H	D	W1	H1	H2	D1	t1	Approx. Mass	W	H	D	W1	H0	H1	H2	H3	D1	t1	Approx. Mass	Mounting Holes d*	External	Internal	Total Heat Generation	
200 V (3-phase)	0.4	140	280	157	126	266	7	39	5	3	140	280	157	126	280	266	7	0	39	5	3	M5	20	39	59	Natural
	0.75																						27	42	69	
	1.5																						50	50	100	
	2.2																						70	59	129	
	3.7			177				59		4			177						59		4		112	74	186	Fan
	5.5																						164	84	248	
	7.5	200	300	197	186	285	7.5	65.5	2.3	6	200	300	197	186	300	285	7.5	0	65.5	2.3	6	M6	219	113	332	
	11									7		310						10			7		374	170	544	
	15	240	350	207	216	335		78		11	240	350	207	216	350	335		0	78		11		429	183	612	
	18.5											380						30					501	211	712	
	22	250	400	258	195	385		100		21	250	535	258	195	400	385		135	100		24		586	274	860	
	30	275	450		220	435				24	275	615		220	450	435		165			27		865	352	1217	
	37	375	600	300	250	575	13	100	3.2	57	380	890	300	250	600	575	13	210	100	3.2	62	M10	1015	411	1426	
	45			330				130		63			330						130		68		1266	505	1771	
	55	450	725	350	325	700				86	455	1100	350	325	725	700		305			94		1588	619	2206	
	75									87											95		2019	838	997	
	90	500	850	360	370	820	15		4.5	108	---											M12	2437	997	3434	
	110	575	885	380	445	855		140		150													2733	1242	3975	

Table 1.3 Inverter Dimensions (mm) and Masses (kg) (Continued)

Voltage Class	Max. Applicable Motor Output [kW]	Dimensions (mm)																					Caloric Value (W)			Cooling Method
		Open Chassis (IP00)									Enclosed Wall-mounted (NEMA1)															
		W	H	D	W1	H1	H2	D1	t1	Approx. Mass	W	H	D	W1	H0	H1	H2	H3	D1	t1	Approx. Mass	Mounting Holes d*	External	Internal	Total Heat Generation	
400 V (3-phase)	0.4	140	280	157	126	266	7	39	5	3	140	280	157	126	280	266	7	0	39	5	3	M5	14	39	53	Natural
	0.75																						17	41	58	
	1.5																						36	48	84	
	2.2			177				59		4			177						59		4		59	56	115	Fan
	3.7																						80	68	148	
	5.5																						127	82	209	
	7.5	200	300	197	186	285	7.5	65.5	2.3	6	200	300	197	186	300	285	7.5		65.5	2.3	6	M6	193	114	307	
	11																						252	158	410	
	15	240	350	207	216	335		78		10	240	350	207	216	350	335			78		10		326	172	498	
	18.5																						426	208	634	
	22	275	450	258	220	435		100		21	275	535	258	220	450	435		85	100		24		466	259	725	
	30																						678	317	995	
	37	325	550	283	260	535		105		36	325	635	283	260	550	535			105		40		784	360	1144	
	45											715						165					901	415	1316	
	55																						1203	495	1698	
	75	450	725	350	325	700	13	130	3.2	88	455	1100	350	325	725	700	13	305	130	3.2	96	M10	1399	575	1974	
	90									89											97		1614	671	2285	
	110	500	850	360	370	820	15		4.5	102	505	1245	360	370	850	820	15	395		4.5	122	M12	2097	853	2950	
	132									120											130		2388	1002	3390	
	160	575	925	380	445	895		140		160	580	1325	380	445	925	895		400	140		170		2791	1147	3938	
	185	Under development																								
	220																									
	300																									

* Same for Open Chassis and Enclosed Wall-mounted Inverters.

Checking and Controlling the Installation Site

Install the Inverter in the installation site described below and maintain optimum conditions.

◆ Installation Site

Install the Inverter under the following conditions in a pollution degree 2 environment.

Table 1.4 Installation Site

Type	Ambient Operating Temperature	Humidity
Enclosed wall-mounted	-10 to + 40 °C	90% RH or less (no condensation)
Open chassis	-10 to + 45 °C	90% RH or less (no condensation)

Protection covers are attached to the top and bottom of the Inverter. Be sure to remove the protection covers before installing a 200 or 400 V Class Inverter with an output of 18.5 kW or less in a panel.

Observe the following precautions when mounting the Inverter.

- Install the Inverter in a clean location free from oil mist and dust. It can be installed in a totally enclosed panel that is completely shielded from floating dust.
- When installing or operating the Inverter, always take special care so that metal powder, oil, water, or other foreign matter does not get into the Inverter.
- Do not install the Inverter on flammable material, such as wood.
- Install the Inverter in a location free from radioactive materials and flammable materials.
- Install the Inverter in a location free from harmful gasses and liquids.
- Install the Inverter in a location without excessive oscillation.
- Install the Inverter in a location free from salt.
- Install the Inverter in a location not in direct sunlight.

◆ Controlling the Ambient Temperature

To enhance the reliability of operation, the Inverter should be installed in an environment free from extreme temperature increases. If the Inverter is installed in an enclosed environment, such as a box, use a cooling fan or air conditioner to maintain the internal air temperature below 45°C.

◆ Protecting the Inverter from Foreign Matter during Installation

Place a shield over the Inverter during installation to protect it from metal powder produced by drilling.

Remove the shield after completing installation. Otherwise, ventilation will be reduced, causing the Inverter to overheat.

Installation Orientation and Space

Install the Inverter vertically so as not to reduce the cooling effect. When installing the Inverter, always provide the following installation space to allow normal heat dissipation.

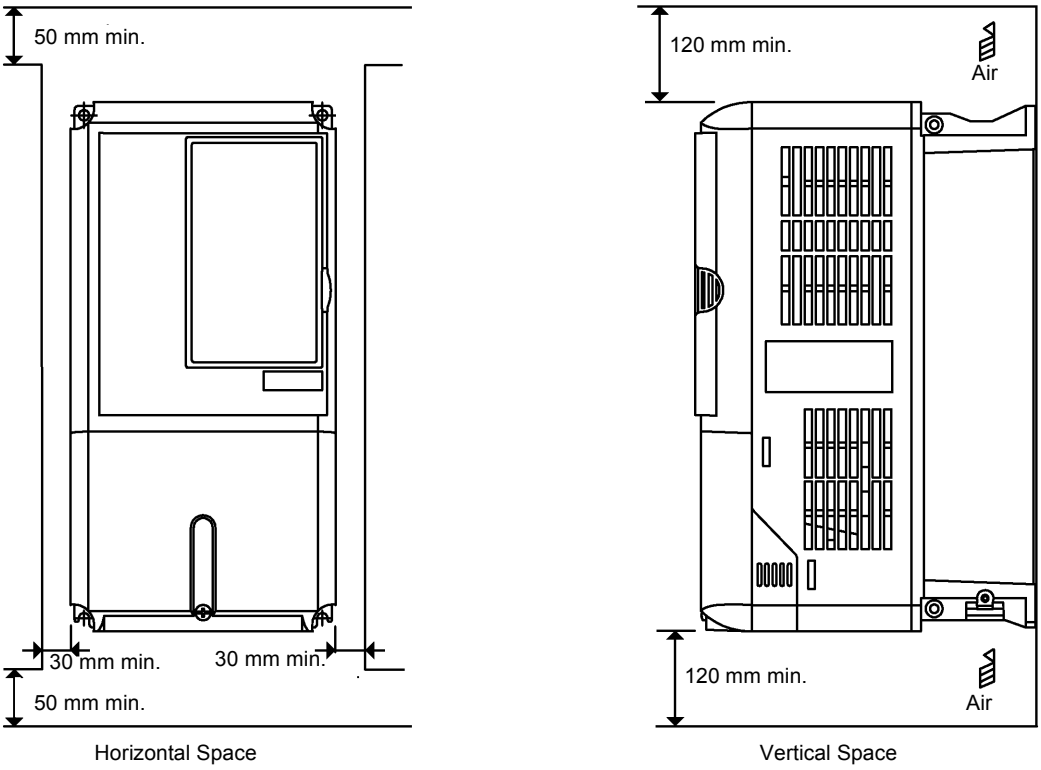

Fig 1.10 Inverter Installation Orientation and Space

IMPORTANT

1. The same space is required horizontally and vertically for both Open Chassis (IP00) and Enclosed Wall-mounted (IP20, Type 1 (NEMA 1) Inverters.
2. Always remove the protection covers before installing a 200 or 400 V Class Inverter with an output of 18.5 kW or less in a panel.
   Always provide enough space for suspension eye bolts and the main circuit lines when installing a 200 or 400 V Class Inverter with an output of 22 kW or more in a panel.

Removing/Attaching the Terminal Cover

Remove the terminal cover to wire cables to the control circuit and main circuit terminals.

◆ Removing the Terminal Cover

■ Inverters of 18.5 kW or Less

Loosen the screws at the bottom of the terminal cover, pressing on the sides of the terminal cover in the directions of arrows 1, and then lift up the terminal cover in the direction of arrow 2.

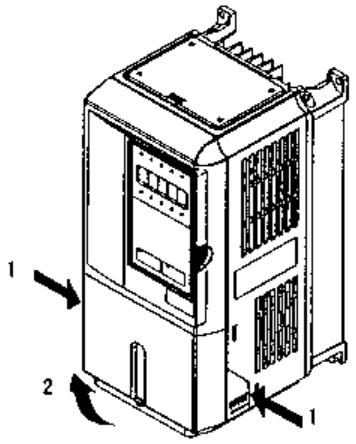

Fig 1.11 Removing the Terminal Cover (Model CIMR-F7A25P5 Shown Above)

■ Inverters of 22 kW or More

Loosen the screws on the left and right at the top of the terminal cover in the direction of arrows 1, and then lift up the terminal cover in the direction of arrow 2.

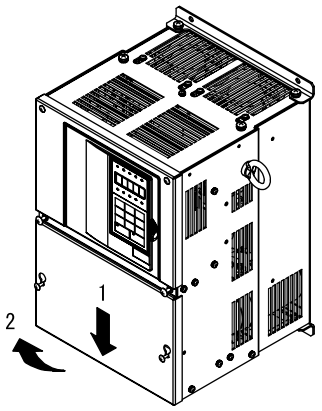

Fig 1.12 Removing the Terminal Cover (Model CIMR-F7A2022 Shown Above)

◆ Attaching the Terminal Cover

When wiring the terminal block has been completed, attach the terminal cover by reversing the removal procedure.

For Inverters with an output of 18.5 kW or less, insert the tab on the top of the terminal cover into the groove on the Inverter and press in on the bottom of the terminal cover until it clicks into place.

For Inverters with 22kW or larger, insert the tab on the top of the terminal cover into the groove on the Inverter, and place the terminal cover by lifting it up towards the top of the Inverter.

Removing/Attaching the Digital Operator and Front Cover

The methods of removing and attaching the Digital Operator and Front Cover are described in this section.

◆ Inverters of 18.5 kW or Less

To attach optional cards or change the terminal card connector, remove the Digital Operator and front cover in addition to the terminal cover. Always remove the Digital Operator from the front cover before removing the terminal cover.

The removal and attachment procedures are given below.

■Removing the Digital Operator

Press the lever on the side of the Digital Operator in the direction of arrow 1 to unlock the Digital Operator and lift the Digital Operator in the direction of arrow 2 to remove as shown in *Fig. 1.13*.

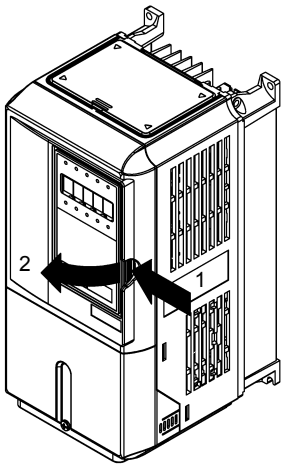

Fig 1.13 Removing the Digital Operator (Model CIMR-F7A45P5 Shown Above)

■Removing the Front Cover

1. Loosen the screw on the front cover.
2. Press the left and right sides of the front cover in the directions of arrows 1 and lift the bottom of the cover in the direction of arrow 2 to remove as shown in *Fig. 1.14*.

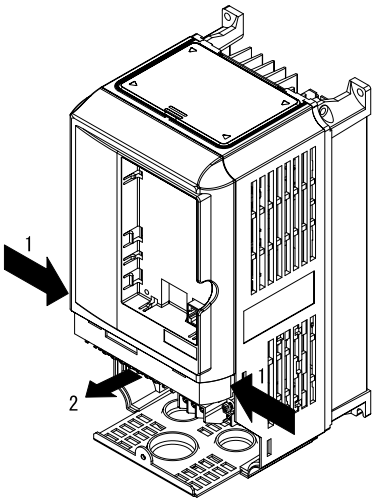

Fig 1.14 Removing the Front Cover (Model CIMR-F7A45P5 Shown Above)

■Mounting the Front Cover

After wiring the terminals, mount the front cover to the Inverter by performing in reverse order to the steps to remove the front cover.

1. Do not mount the front cover with the Digital Operator attached to the front cover; otherwise, Digital Operator may malfunction due to imperfect contact.
2. Insert the tab of the upper part of the front cover into the groove of the Inverter and press the lower part of the front cover onto the Inverter until the front cover snaps shut.

■Mounting the Digital Operator

After attaching the terminal cover, mount the Digital Operator onto the Inverting using the following procedure.

1. Hook the Digital Operator at A (two locations) on the front cover in the direction of arrow 1 as shown in the following illustration.
2. Press the Digital Operator in the direction of arrow 2 until it snaps in place at B (two locations).
3. Tighten the screw on the front cover.

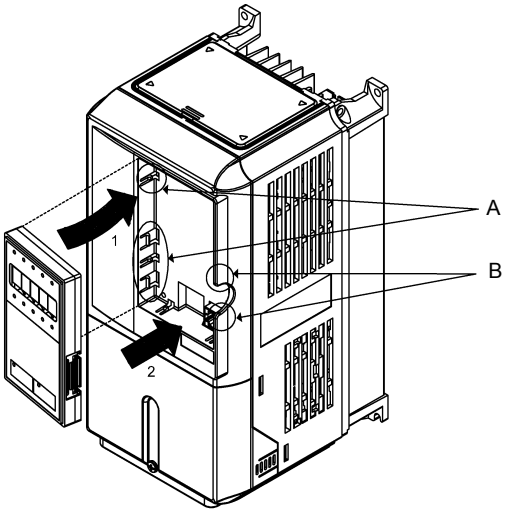

Fig 1.15 Mounting the Digital Operator

IMPORTANT

1. Do not remove or attach the Digital Operator or mount or remove the front cover using methods other than those described above, otherwise the Inverter may break or malfunction due to imperfect contact.
2. Never attach the front cover to the Inverter with the Digital Operator attached to the front cover. Imperfect contact can result.
   Always attach the front cover to the Inverter by itself first, and then attach the Digital Operator to the front cover.

◆ Inverters of 22 kW or More

For Inverter with an output of 22 kW or more, remove the terminal cover and then use the following procedures to remove the Digital Operator and main cover.

■Removing the Digital Operator

Use the same procedure as for Inverters with an output of 18.5 kW or less.

■Removing the Front Cover

Lift up at the location label 1 at the top of the control circuit terminal card in the direction of arrow 2.

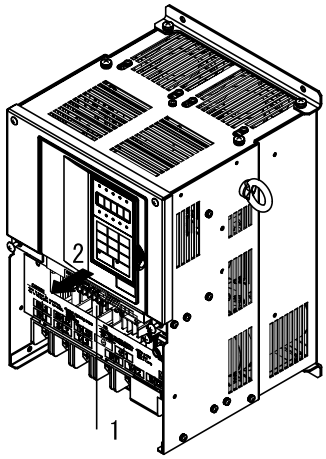

Fig 1.16 Removing the Front Cover (Model CIMR-F7A2022 Shown Above)

■ Attaching the Front Cover

After completing required work, such as mounting an optional card or setting the terminal card, attach the front cover by reversing the procedure to remove it.

1. Confirm that the Digital Operator is not mounted on the front cover. Contact faults can occur if the cover is attached while the Digital Operator is mounted to it.
2. Insert the tab on the top of the front cover into the slot on the Inverter and press in on the cover until it clicks into place on the Inverter.

■Attaching the Digital Operator

Use the same procedure as for Inverters with an output of 18.5 kW or less.

2

Wiring

This chapter describes wiring terminals, main circuit terminal connections, main circuit terminal wiring specifications, control circuit terminals, and control circuit wiring specifications.

Connections to Peripheral Devices

Examples of connections between the Inverter and typical peripheral devices are shown in *Fig 2.1*.

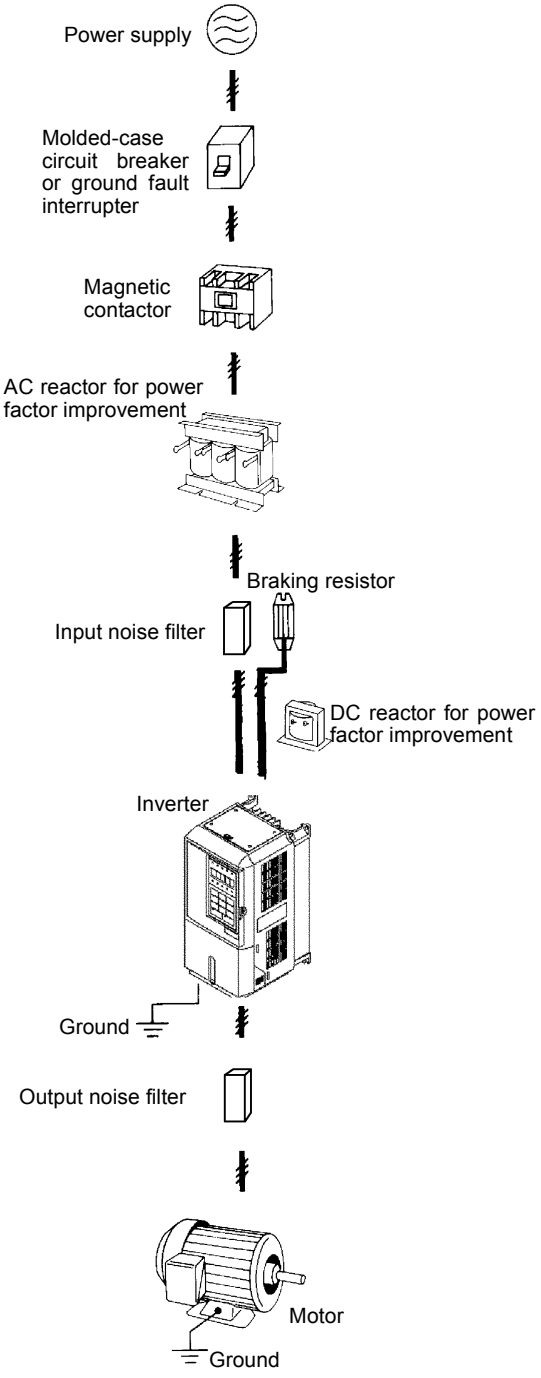

Fig 2.1 Example Connections to Peripheral Devices

Connection Diagram

The connection diagram of the Inverter is shown in *Fig 2.2*.

When using the Digital Operator, the motor can be operated by wiring only the main circuits.

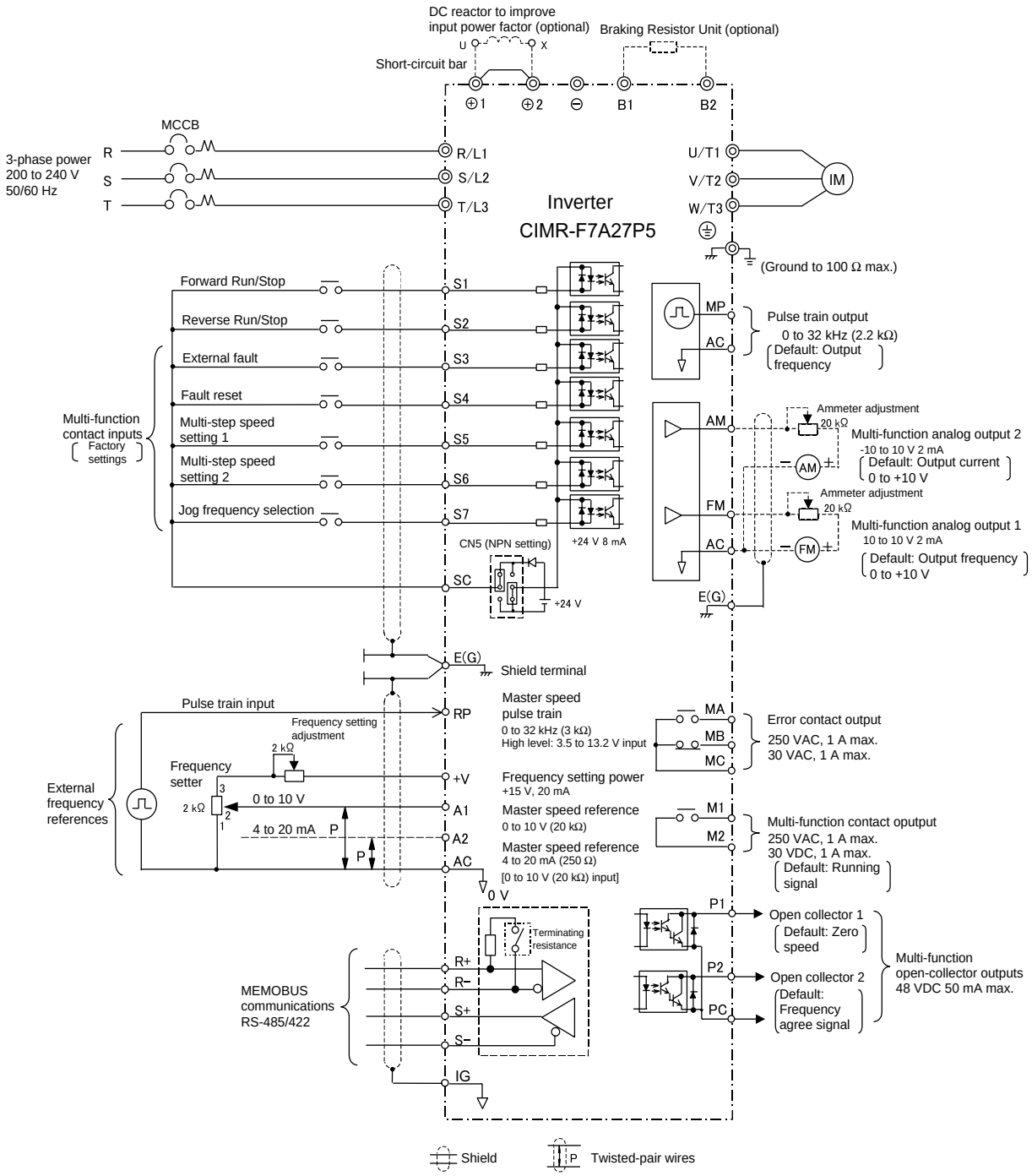

Fig 2.2 Connection Diagram (Model CIMR-F7A27P5 Shown Above)

IMPORTANT

1. Control circuit terminals are arranged as shown below.

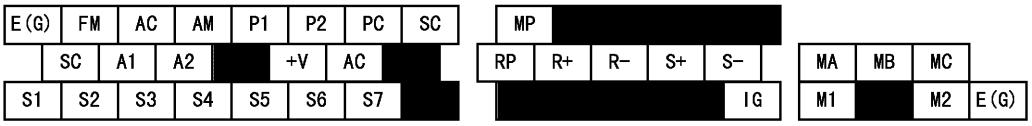

2. The output current capacity of the +V terminal is 20 mA.
3. Disable the stall prevention during deceleration (set constant L3-04 to 0) when using a Braking Resistor Unit. If this user constant is not changed to disable stall prevention, the system may not stop during deceleration.
4. Main circuit terminals are indicated with double circles and control circuit terminals are indicated with single circles.
5. Sequence input signals S1 to S7 are labeled for sequence connections (0 V common and sinking mode) for no-voltage contacts or NPN transistors. These are the default settings.
   For PNP transistor sequence connections (+24V common and sourcing mode) or to provide a 24-V external power supply, refer to*Table 2.13*.
6. The master speed frequency reference can set to input either a voltage (terminal A1) or current (terminal A2) by changing the setting of parameter H3-13. The default setting is for a voltage reference input.
7. The multi-function analog output is a dedicated meter output for an analog frequency meter, ammeter, voltmeter, wattmeter, etc. Do not use this output for feedback control or for any other control purpose.
8. DC reactors to improve the input power factor built into 200 V Class Inverters for 22 to 110 kW and 400 V Class Inverters for 22 to 300 kW. A DC reactor is thus an option only for Inverters for 18.5 kW or less. Remove the short bar when connecting a DC reactor to Inverters for 18.5 kW or less.
9. Set parameter L8-01 to 1 when using a breaking resistor (ERF). When using a Braking Resistor Unit, a shutoff sequence for the power supply must be made using a thermal relay trip.

Terminal Block Configuration

The terminal arrangement for 200 V Class Inverters are shown in *Fig 2.3* and *Fig 2.4*.

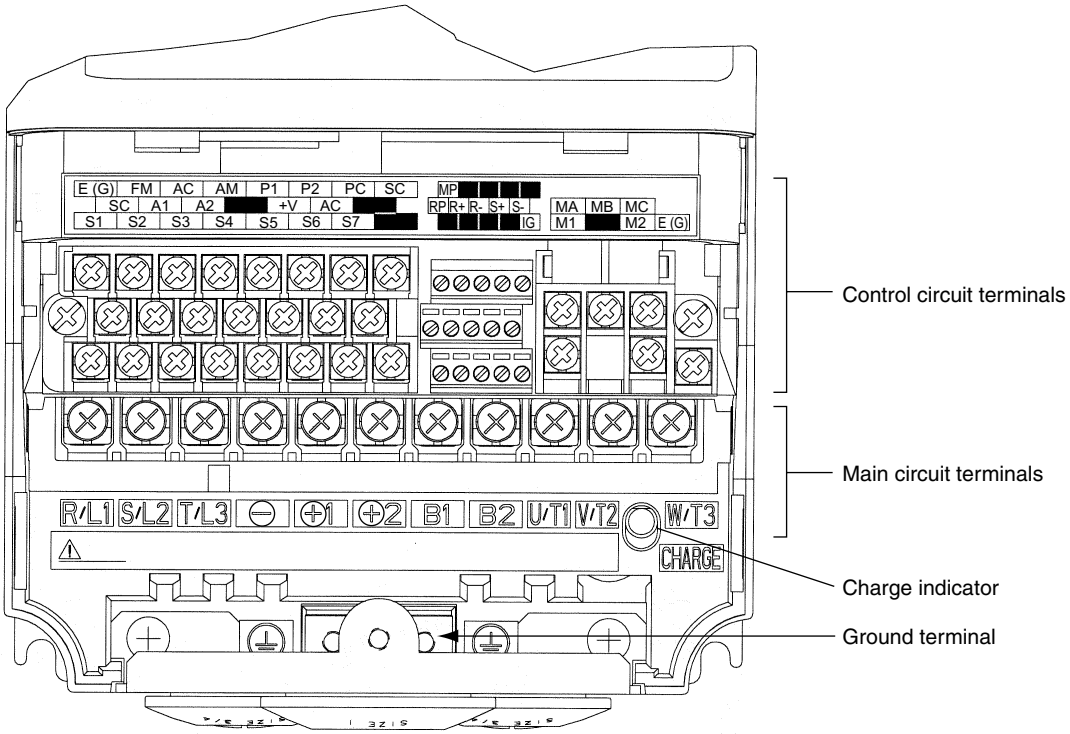

Fig 2.3 Terminal Arrangement (200 V Class Inverter for 0.4 kW Shown Above)

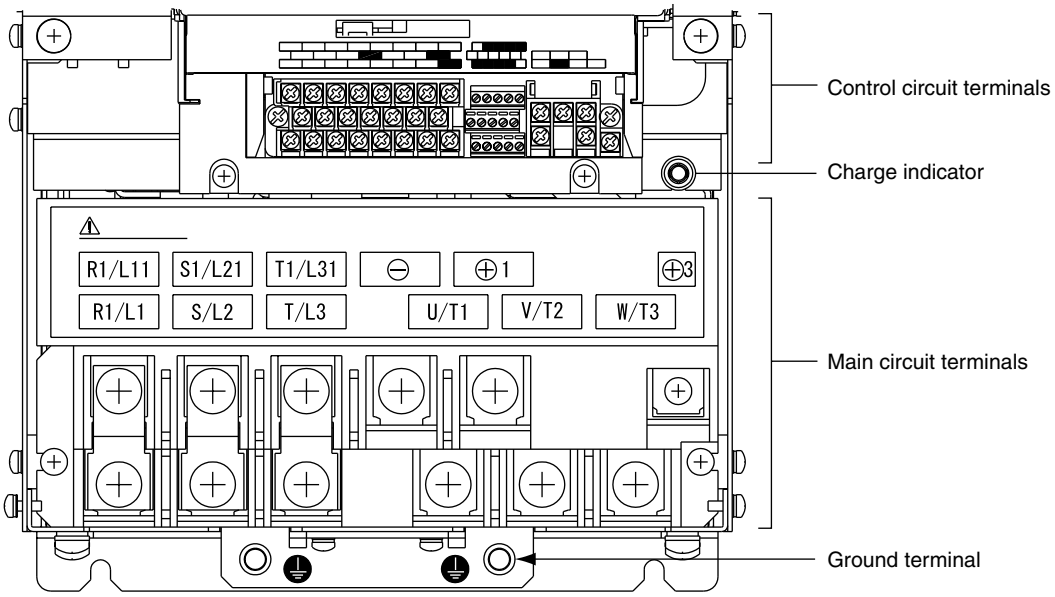

Fig 2.4 Terminal Arrangement (200 V Class Inverter for 22 kW Shown Above)

Wiring Main Circuit Terminals

◆ Applicable Wire Sizes and Closed-loop Connectors

Select the appropriate wires and crimp terminals from *Table 2.1* to *Table 2.3*. Refer to instruction manual TOE-C726-2 for wire sizes for Braking Resistor Units and Braking Units.

Table 2.1 200 V Class Wire Sizes

Inverter Model CIMR-□	Terminal Symbol	Terminal Screws	Tightening Torque (N•m)	Possible Wire Sizes mm^2(AWG)	Recommended Wire Size mm^2 (AWG)	Wire Type
F7A20P4	R/L1, S/L2, T/L3, ⊖, ⊕1, ⊕2, B1, B2, U/T1, V/T2, W/T3	M4	1.2 to 1.5	2 to 5.5 (14 to 10)	2 (14)	Power cables, e.g., 600 V vinyl power cables
	⏚					
F7A20P7	R/L1, S/L2, T/L3, ⊖, ⊕1, ⊕2, B1, B2, U/T1, V/T2, W/T3	M4	1.2 to 1.5	2 to 5.5 (14 to 10)	2 (14)	
	⏚					
F7A21P5	R/L1, S/L2, T/L3, ⊖, ⊕1, ⊕2, B1, B2, U/T1, V/T2, W/T3	M4	1.2 to 1.5	2 to 5.5 (14 to 10)	2 (14)	
	⏚					
F7A22P2	R/L1, S/L2, T/L3, ⊖, ⊕1, ⊕2, B1, B2, U/T1, V/T2, W/T3	M4	1.2 to 1.5	2 to 5.5 (14 to 10)	2 (14)	
	⏚					
F7A23P7	R/L1, S/L2, T/L3, ⊖, ⊕1, ⊕2, B1, B2, U/T1, V/T2, W/T3	M4	1.2 to 1.5	3.5 to 5.5 (12 to 10)	3.5 (12)	
	⏚					
F7A25P5	R/L1, S/L2, T/L3, ⊖, ⊕1, ⊕2, B1, B2, U/T1, V/T2, W/T3	M4	1.2 to 1.5	5.5 (10)	5.5 (10)	
	⏚					
F7A27P5	R/L1, S/L2, T/L3, ⊖, ⊕1, ⊕2, B1, B2, U/T1, V/T2, W/T3	M5	2.5	8 to 14 (8 to 6)	8 (8)	
	⏚					
F7A2011	R/L1, S/L2, T/L3, ⊖, ⊕1, ⊕2, B1, B2, U/T1, V/T2, W/T3	M5	2.5	14 to 22 (6 to 4)	14 (6)	
	⏚					
F7A2015	R/L1, S/L2, T/L3, ⊖, ⊕1, ⊕2, U/T1, V/T2, W/T3	M6	4.0 to 5.0	30 to 38 (4 to 2)	30 (4)	
	B1, B2	M5	2.5	8 to 14 (8 to 6)	-	
	⏚	M6	4.0 to 5.0	22 (4)	22 (4)	
F7A2018	R/L1, S/L2, T/L3, ⊖, ⊕1, ⊕2, U/T1, V/T2, W/T3	M8	9.0 to 10.0	30 to 38 (3 to 2)	30 (3)	
	B1, B2	M5	2.5	8 to 14 (8 to 6)	-	
	⏚	M6	4.0 to 5.0	22 (4)	22 (4)	
F7A2022	R/L1, S/L2, T/L3, ⊖, ⊕1, U/T1, V/T2, W/T3, R1/L11, S1/L21, T1/L31	M8	9.0 to 10.0	30 to 60 (3 to 1)	30 (3)	
	⊕3	M6	4.0 to 5.0	8 to 22 (8 to 4)	-	
	⏚	M8	9.0 to 10.0	22 to 38 (4 to 2)	22 (4)	
F7A2030	R/L1, S/L2, T/L3, ⊖, ⊕1 U/T1, V/T2, W/T3, R1/L11, S1/L21, T1/L31	M8	9.0 to 10.0	50 to 60 (1 to 1/0)	50 (1)	
	⊕3	M6	4.0 to 5.0	8 to 22 (8 to 4)	-	
	⏚	M8	9.0 to 10.0	22 to 38 (4 to 2)	22 (4)	

* The wire thickness is set for copper wires at 75°C.

Inverter Model CIMR-□	Terminal Symbol	Terminal Screws	Tightening Torque (N•m)	Possible Wire Sizes mm^2(AWG)	Recommended Wire Size mm^2 (AWG)	Wire Type
F7A2037	R/L1, S/L2, T/L3, ⊖, ⊕1 U/T1, V/T2, W/T3, R1/L11, S1/L21, T1/L31	M10	17.6 to 22.5	60 to 100 (2/0 to 4/0)	60 (2/0)	Power cables, e.g., 600 V vinyl power cables
	⊕3	M8	8.8 to 10.8	5.5 to 22 (10 to 4)	-	
	⏚	M10	17.6 to 22.5	30 to 60 (2 to 2/0)	30 (2)	
	r/l1, ⚠/l2	M4	1.3 to 1.4	0.5 to 5.5 (20 to 10)	1.25 (16)	
F7A2045	R/L1, S/L2, T/L3, ⊖, ⊕1 U/T1, V/T2, W/T3, R1/L11, S1/L21, T1/L31	M10	17.6 to 22.5	80 to 100 (3/0 to 4/0)	80 (3/0)	
	⊕3	M8	8.8 to 10.8	5.5 to 22 (10 to 4)	-	
	⏚	M10	17.6 to 22.5	38 to 60 (1 to 2/0)	38 (1)	
	r/l1, ⚠/l2	M4	1.3 to 1.4	0.5 to 5.5 (20 to 10)	1.25 (16)	
F7A2055	R/L1, S/L2, T/L3, ⊖, ⊕1	M12	31.4 to 39.2	50 to 100 (1/0 to 4/0)	50 × 2P (1/0 × 2P)	
	U/T1, V/T2, W/T3, R1/L11, S1/L21, T1/L31	M10	17.6 to 22.5	100 (4/0)	100 (4/0)	
	⊕3	M8	8.8 to 10.8	5.5 to 60 (10 to 2/0)	-	
	⏚	M10	17.6 to 22.5	30 to 60 (3 to 4/0)	50 (1/0)	
	r/l1, ⚠/l2	M4	1.3 to 1.4	0.5 to 5.5 (20 to 10)	1.25 (16)	
F7A2075	R/L1, S/L2, T/L3, ⊖, ⊕1	M12	31.4 to 39.2	80 to 125 (3/0 to 250)	80 × 2P (3/0 × 2P)	
	U/T1, V/T2, W/T3, R1/L11, S1/L21, T1/L31	M10	17.6 to 22.5	80 to 100 (3/0 to 4/0)	80 × 2P (3/0 × 2P)	
	⊕3	M8	8.8 to 10.8	5.5 to 60 (10 to 2/0)	-	
	⏚	M10	17.6 to 22.5	100 to 200 (3/0 to 400)	100 (3/0)	
	r/l1, ⚠/l2	M4	1.3 to 1.4	0.5 to 5.5 (20 to 10)	1.25 (16)	
F7A2090	R/L1, S/L2, T/L3, ⊖, ⊕1	M12	31.4 to 39.2	150 to 200 (250 to 400)	150 × 2P (250 × 2P)	
	U/T1, V/T2, W/T3, R1/L11, S1/L21, T1/L31	M12	31.4 to 39.2	100 to 150 (4/0 to 300)	100 × 2P (4/0 × 2P)	
	⊕3	M8	8.8 to 10.8	5.5 to 60 (10 to 2/0)	-	
	⏚	M12	31.4 to 39.2	60 to 150 (2/0 to 300)	60 × 2P (2/0 × 2P)	
	r/l1, ⚠/l2	M4	1.3 to 1.4	0.5 to 5.5 (20 to 10)	1.25 (16)	

* The wire thickness is set for copper wires at 75°C.

*

F7A2110	R/L1, S/L2, T/L3, ⊖, ⊕1	M12	31.4 to 39.2	200 to 325 (350 to 600)	200 × 2P, or 50 × 4P (350 × 2P, or 1/0 × 2P)	Power cables, e.g., 600 V vinyl power cables
	U/T1, V/T2, W/T3, R1/L11, S1/L21, T1/L31	M12	31.4 to 39.2	150 to 325 (300 to 600)	150 × 2P, or 50 × 4P (300 × 2P, or 1/0 × 4P)	
	⊕3	M8	8.8 to 10.8	5.5 to 60 (10 to 2/0)	-	
	⏚	M12	31.4 to 39.2	150 (300)	150 × 2P (300 × 2P)	
	r/l1, ﻫ/l2	M4	1.3 to 1.4	0.5 to 5.5 (20 to 10)	1.25 (16)	

* The wire thickness is set for copper wires at 75°C.

Table 2.2 400 V Class Wire Sizes

Inverter Model CIMR-□	Terminal Symbol	Terminal Screws	Tightening Torque (N•m)	Possible Wire Sizes mm^2 (AWG)	Recommended Wire Size mm^2 (AWG)	Wire Type
F7A40P4	R/L1, S/L2, T/L3, ⊖, ⊕1, ⊕2, B1, B2, U/T1, V/T2, W/T3	M4	1.2 to 1.5	2 to 5.5 (14 to 10)	2 (14)	Power cables, e.g., 600 V vinyl power cables
	⏚					
F7A40P7	R/L1, S/L2, T/L3, ⊖, ⊕1, ⊕2, B1, B2, U/T1, V/T2, W/T3	M4	1.2 to 1.5	2 to 5.5 (14 to 10)	2 (14)	
	⏚					
F7A41P5	R/L1, S/L2, T/L3, ⊖, ⊕1, ⊕2, B1, B2, U/T1, V/T2, W/T3	M4	1.2 to 1.5	2 to 5.5 (14 to 10)	2 (14)	
	⏚					
F7A42P2	R/L1, S/L2, T/L3, ⊖, ⊕1, ⊕2, B1, B2, U/T1, V/T2, W/T3	M4	1.2 to 1.5	2 to 5.5 (14 to 10)	2 (14)	
F7A43P7	R/L1, S/L2, T/L3, ⊖, ⊕1, ⊕2, B1, B2, U/T1, V/T2, W/T3	M4	1.2 to 1.5	2 to 5.5 (14 to 10)	3.5 (12)	
	⏚				2 (14)	
F7A45P5	R/L1, S/L2, T/L3, ⊖, ⊕1, ⊕2, B1, B2, U/T1, V/T2, W/T3	M4	1.2 to 1.5	3.5 to 5.5 (12 to 10)	3.5 (12)	
	⏚			2 to 5.5 (14 to 10)	2 (14)	
F7A47P5	R/L1, S/L2, T/L3, ⊖, ⊕1, ⊕2, B1, B2, U/T1, V/T2, W/T3	M4	1.2 to 1.5	5.5(10)	5.5 (10)	
	⏚			3.5 to 5.5 (12 to 10)	3.5 (12)	
F7A4011	R/L1, S/L2, T/L3, ⊖, ⊕1, ⊕2, B1, B2, U/T1, V/T2, W/T3	M5	2.5	5.5 to 14 (10 to 6)	8 (8)	
	⏚				5.5 (10)	
F7A4015	R/L1, S/L2, T/L3, ⊖, ⊕1, ⊕2, B1, B2, U/T1, V/T2, W/T3	M5	2.5	8 to 14 (8 to 6)	8 (8)	
	⏚	M5 (M6)	2.5 (4.0 to 5.0)	5.5 to 14 (10 to 6)	5.5 (10)	

* The wire thickness is set for copper wires at 75°C.

Inverter Model CIMR-□	Terminal Symbol	Terminal Screws	Tightening Torque (N•m)	Possible Wire Sizes mm^2 (AWG)	Recommended Wire Size mm^2 (AWG)	Wire Type
F7A4018	R/L1, S/L2, T/L3, ⊖, ⊕1, ⊕2, U/T1, V/T2, W/T3	M6	4.0 to 5.0	8 to 38 (8 to 2)	8 (8)	Power cables, e.g., 600 V vinyl power cables
	B1, B2	M5	2.5	8 (8)	8 (8)	
	⏚	M6	4.0 to 5.0	8 to 22 (8 to 4)	8 (8)	
F7A4022	R/L1, S/L2, T/L3, ⊖, ⊕1, ⊕3, U/T1, V/T2, W/T3, R1/L11, S1/L21, T1/L31	M6	4.0 to 5.0	14 to 22 (6 to 4)	14 (6)	
	⏚	M8	9.0 to 10.0	14 to 38 (6 to 2)	14 (6)	
F7A4030	R/L1, S/L2, T/L3, ⊖, ⊕1, ⊕3, U/T1, V/T2, W/T3, R1/L11, S1/L21, T1/L31	M6	4.0 to 5.0	22 (4)	22 (4)	
	⏚	M8	9.0 to 10.0	22 to 38 (4 to 2)	22 (4)	
F7A4037	R/L1, S/L2, T/L3, ⊖, ⊕1, U/T1, V/T2, W/T3, R1/L11, S1/L21, T1/L31	M8	9.0 to 10.0	22 to 60 (4 to 1/0)	38 (2)	
	⊕3	M6	4.0 to 5.0	8 to 22 (8 to 4)	-	
	⏚	M8	9.0 to 10.0	22 to 38 (4 to 2)	22 (4)	
F7A4045	R/L1, S/L2, T/L3, ⊖, ⊕1, U/T1, V/T2, W/T3, R1/L11, S1/L21, T1/L31	M8	9.0 to 10.0	38 to 60 (2 to 1/0)	38 (2)	
	⊕3	M6	4.0 to 5.0	8 to 22 (8 to 4)	-	
	⏚	M8	9.0 to 10.0	22 to 38 (4 to 2)	22 (4)	

* The wire thickness is set for copper wires at 75°C.

Inverter Model CIMR-□	Terminal Symbol	Terminal Screws	Tightening Torque (N•m)	Possible Wire Sizes mm^2 (AWG)	Recommended Wire Size mm^2 (AWG)	Wire Type
F7A4055	R/L1, S/L2, T/L3, ⊖, ⊕1, U/T1, V/T2, W/T3, R1/L11, S1/L21, T1/L31	M8	9.0 to 10.0	50 to 60 (1 to 1/0)	50 (1)	Power cables, e.g., 600 V vinyl power cables
	⊕3	M6	4.0 to 5.0	8 to 22 (8 to 4)	-	
	⏚	M8	9.0 to 10.0	22 to 38 (4 to 2)	22 (4)	
F7A4075	R/L1, S/L2, T/L3, ⊖, ⊕1	M12	31.4 to 39.2	60 to 100 (2/0 to 4/0)	60 (2/0)	
	U/T1, V/T2, W/T3, R1/L11, S1/L21, T1/L31	M10	17.6 to 22.5	50 to 100 (1/0 to 4/0)	50 (1/0)	
	⊕3	M8	8.8 to 10.8	5.5 to 22 (10 to 4)	-	
	⏚	M12	31.4 to 39.2	38 to 60 (2 to 2/0)	38 (2)	
	r/ℓ1, ∘200/ℓ2 200, ∘400/ℓ2 400	M4	1.3 to 1.4	0.5 to 5.5 (20 to 10)	1.25 (16)	
F7A4090	R/L1, S/L2, T/L3, ⊖, ⊕1	M12	31.4 to 39.2	80 to 100 (3/0 to 4/0)	100 (4/0)	
	U/T1, V/T2, W/T3, R1/L11, S1/L21, T1/L31	M10	17.6 to 22.5	80 to 100 (3/0 to 4/0)	100 (4/0)	
	⊕3	M8	8.8 to 10.8	8 to 22 (8 to 4)	-	
	⏚	M12	31.4 to 39.2	50 to 100 (1 to 4/0)	50 (1)	
	r/ℓ1, ∘200/ℓ2 200, ∘400/ℓ2 400	M4	1.3 to 1.4	0.5 to 5.5 (20 to 10)	1.25 (16)	
F7A4110	R/L1, S/L2, T/L3, ⊖, ⊕1	M12	31.4 to 39.2	50 to 100 (1/0 to 4/0)	50 × 2P (1/0 × 2P)	
	U/T1, V/T2, W/T3, R1/L11, S1/L21, T1/L33	M12	31.4 to 39.2	50 to 100 (1/0 to 4/0)	50 × 2P (1/0 × 2P)	
	⊕3	M8	8.8 to 10.8	8 to 60 (8 to 2/0)	-	
	⏚	M12	31.4 to 39.2	60 to 150 (2/0 to 300)	600 (2/0)	
	r/ℓ1, ∘200/ℓ2 200, ∘400/ℓ2 400	M4	1.3 to 1.4	0.5 to 5.5 (20 to 10)	1.25 (16)	
F7A4132	R/L1, S/L2, T/L3, ⊖, ⊕1	M12	31.4 to 39.2	80 to 100 (3/0 to 4/0)	80 × 2P (3/0 × 2P)	
	U/T1, V/T2, W/T3, R1/L11, S1/L21, T1/L33	M12	31.4 to 39.2	60 to 100 (2/0 to 4/0)	60 × 2P (2/0 × 2P)	
	⊕3	M8	8.8 to 10.8	8 to 60 (8 to 2/0)	-	
	⏚	M12	31.4 to 39.2	100 to 150 (4/0 to 300)	100 (4/0)	
	r/ℓ1, ∘200/ℓ2 200, ∘400/ℓ2 400	M4	1.3 to 1.4	0.5 to 5.5 (20 to 10)	1.25 (16)	
F7A4160	R/L1, S/L2, T/L3, ⊖, ⊕1	M12	31.4 to 39.2	100 to 200 (4/0 to 400)	100 × 2P (4/0 × 2P)	
	U/T1, V/T2, W/T3, R1/L11, S1/L21, T1/L33	M12	31.4 to 39.2	80 to 200 (3/0 to 400)	80 × 2P (3/0 × 2P)	
	⊕3	M8	8.8 to 10.8	80 to 60 (8 to 2/0)	-	
	⏚	M12	31.4 to 39.2	50 to 150 (1/0 to 300)	50 × 2P (1/0 × 2P)	
	r/ℓ1, ∘200/ℓ2 200, ∘400/ℓ2 400	M4	1.3 to 1.4	0.5 to 5.5 (20 to 10)	1.25 (16)	
F7A4185	Under development					
F7A4220						
F7A4300						

The wire thickness is set for copper wires at 75°C.

Table 2.3 Closed-loop Connector Sizes (JIS C2805) (200 V Class and 400 V Class)

Wire Thickness (mm^2)	Terminal Screws	Size
0.5	M3.5	1.25 to 3.5
	M4	1.25 to 4
0.75	M3.5	1.25 to 3.5
	M4	1.25 to 4
1.25	M3.5	1.25 to 3.5
	M4	1.25 to 4
2	M3.5	2 to 3.5
	M4	2 to 4
	M5	2 to 5
	M6	2 to 6
	M8	2 to 8
3.5/5.5	M4	5.5 to 4
	M5	5.5 to 5
	M6	5.5 to 6
	M8	5.5 to 8
8	M5	8 to 5
	M6	8 to 6
	M8	8 to 8
14	M6	14 to 6
	M8	14 to 8
22	M6	22 to 6
	M8	22 to 8
30/38	M8	38 to 8
50/60	M8	60 to 8
	M10	60 to 10
80	M10	80 to 10
100		100 to 10
100	M12	100 to 12
150		150 to 12
200		200 to 12
325	M12 x 2	325 to 12
	M16	325 to 16

IMPORTANT

Determine the wire size for the main circuit so that line voltage drop is within 2% of the rated voltage. Line voltage drop is calculated as follows:

Line voltage drop (V) = $\sqrt{3}$ x wire resistance (W/km) x wire length (m) x current (A) x 10^{-3}

The following UL Listed closed-loop crimp connectors must be installed on conductors before installing to terminal blocks.

Table 2.3.1 Recommended JST (or equivalent) Closed-loop terminals.

Model CIMR-F7,-E7	Japan Solderless Terminal Part Number	
	Input Terminal	Output Terminal
2011	14-5	14-5
2018	38-8	38-8
2022	38-8	38-8
2030	60-8	60-8
2037	80-10	80-10
2045	150-10	150-10
2055	60-12	60-12
2075	80-12	80-12
2090	150-12	100-10
2110	150-12	150-12
4022	14-6	14-6
4030	22-6	22-6
4037	38-8	38-8
4045	60-8	60-8
4055	60-8	60-8
4075	100-12	80-10
4090	150-12	100-10
4110	60-12	60-12
4132	70-12	70-12
4160	100-12	80-12

NOTE: Use 75º C rated wire only for field wiring terminals (or equivalent).

◆ Main Circuit Terminal Functions

Main circuit terminal functions are summarized according to terminal symbols in *Table 2.4*. Wire the terminals correctly for the desired purposes.

Table 2.4 Main Circuit Terminal Functions (200 V Class and 400 V Class)

Purpose	Terminal Symbol	Model: CIMR-F7A Å†	
		200 V Class	400 V Class
Main circuit power input	R/L1, S/L2, T/L3	20P4 to 2110	40P4 to 4160
	R1/L11, S1/L21, T1/L31	2022 to 2110	4022 to 4160
Inverter outputs	U/T1, V/T2, W/T3	20P4 to 2110	40P4 to 4160
DC power input	⊕1, ⊖	20P4 to 2110	40P4 to 4160
Braking Resistor Unit connection	B1, B2	20P4 to 2011	40P4 to 4018
DC reactor connection	⊕1, ⊕2	20P4 to 2018	40P4 to 4018
Braking Unit connection	⊕3, ⊖	2022 to 2110	4022 to 4160
Ground	⏚	20P4 to 2110	40P4 to 4160

◆ Main Circuit Configurations

The main circuit configurations of the Inverter are shown in *Fig 2.5*.

Table 2.5 Inverter Main Circuit Configurations

200 V Class	400 V Class
CIMR-F7A20P4 to 2018 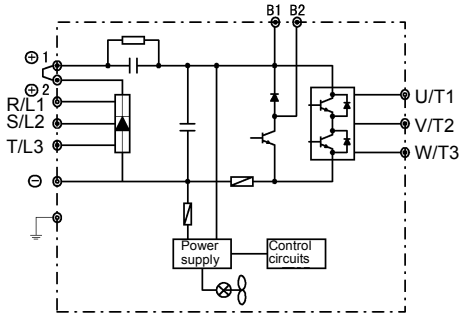	CIMR-F7A40P4 to 4018 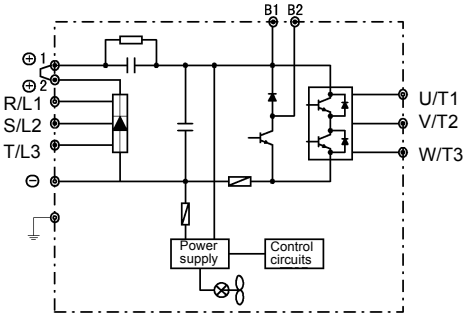
CIMR-F7A2022, 2030 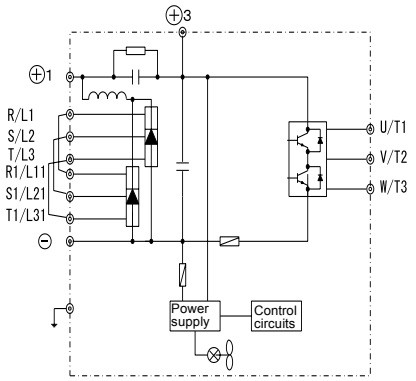	CIMR-F7A4022 to 4055 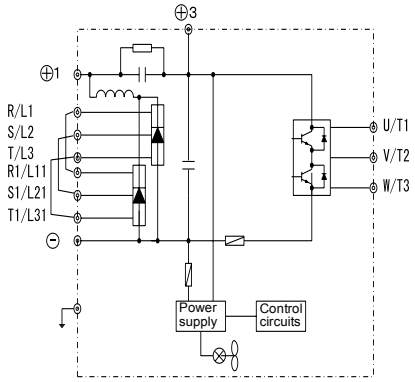
CIMR-F7A2037 to 2110 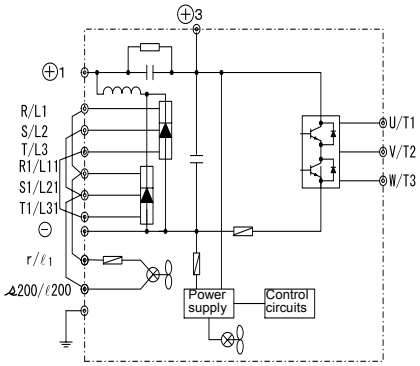	CIMR-F7A4075 to 4160 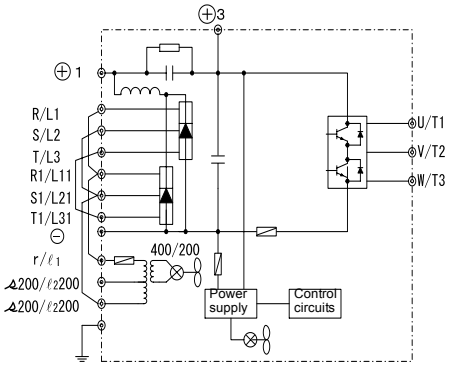

Note 1. The CIMR-4185 to 4300 Inverters are currently under development.
2. Consult your Yaskawa representative before using 12-phase rectification.

◆ Standard Connection Diagrams

Standard Inverter connection diagrams are shown in *Fig 2.5.* These are the same for both 200 V Class and 400 V Class Inverters. The connections depend on the Inverter capacity.

■CIMR-F7A20P4 to 2018 and 40P4 to 4018

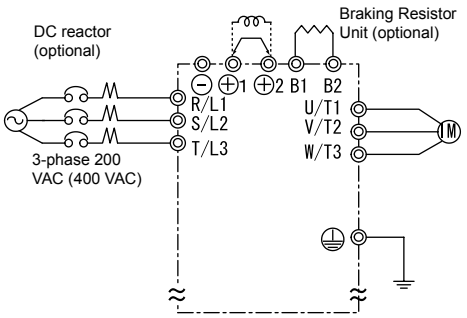

Be sure to remove the short-circuit bar before connecting the DC reactor.

■CIMR-F7A2022, 2030, and 4022 to 4055

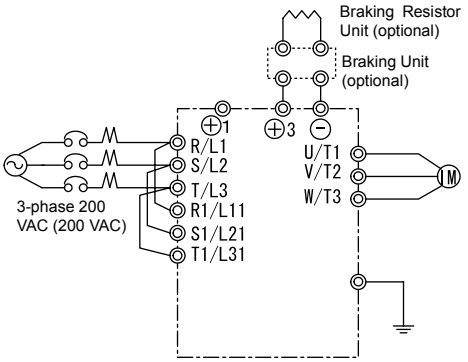

The DC reactor is built in.

■CIMR-FA2037 to 2110

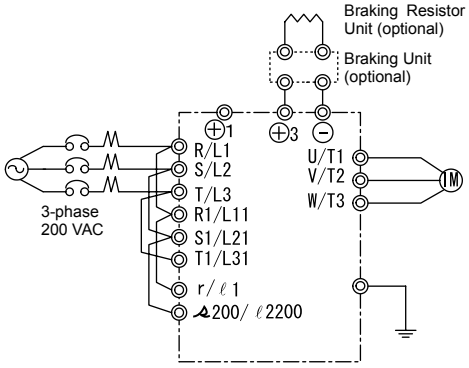

The DC reactor is built in.

■CIMR-F7A4075 to 4160

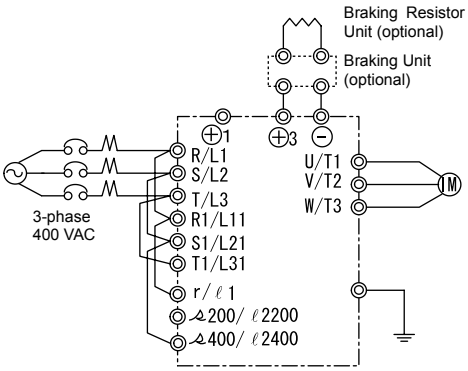

The DC reactor is built in.

Fig 2.5 Main Circuit Terminal Connections

Note: Control power is supplied internally from the main circuit DC power for all Inverter models.
*1: The control power is input at r - for 200V class 30~75 kW (2030~2075) inverters and at r-400 for 400V class 55~300kW (4055~4300) inverters. For other inverter models, the control power is internally supplied from the DC bus.
*2: r-R and (400) - S are jumpered at the factory. For 2018, 2022, 4018~4300 models, remove the jumper wire if the main circuit power is to be supplied from the DC power supply.

◆ Wiring the Main Circuits

This section describes wiring connections for the main circuit inputs and outputs.

■Wiring Main Circuit Inputs

Observe the following precautions for the main circuit power supply input.

Installing a Molded-case Circuit Breaker

Always connect the power input terminals (R, S, and T) and power supply via a molded-case circuit breaker (MCCB) suitable for the Inverter.

- Choose an MCCB with a capacity of 1.5 to 2 times the Inverter's rated current.
- For the MCCB's time characteristics, be sure to consider the Inverter's overload protection (one minute at 150% of the rated output current).
- If the same MCCB is to be used for more than one Inverter, or other devices, set up a sequence so that the power supply will be turned OFF by a fault output, as shown in *Fig 2.6*.

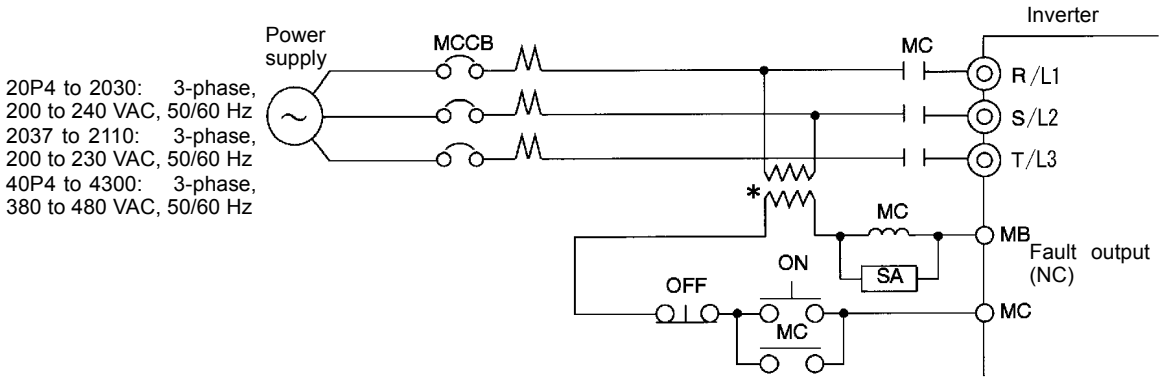

* For 400 V class Inverters, connect a 400/200 V transformer.

Fig 2.6 MCCB Installation

Installing a Ground Fault Interrupter

Inverter outputs use high-speed switching, so high-frequency leakage current is generated. Therefore, at the inverter primary side, use a ground fault interrupter specially designed for inverter use to detect only the leakage current in the frequency range that is hazardous to humans and exclude high-frequency leakage current.

- Choose a ground fault interrupter specially designed for inverter use with a sensitivity amperage of at least 30 mA per Inverter.
- When using a general ground fault interrupter, choose a model with a sensitivity amperage of 200 mA or more per inverter and with an operating time of 0.1 s or more.

Installing a Magnetic Contactor

If the power supply for the main circuit is to be shut off during a sequence, a magnetic contactor (MC) can be used in place of a MCCB.

However, when a magnetic contactor on the primary side of the main circuit is used to forcibly stop the Inverter, the regenerative braking does not work and the Inverter will coast to a stop.

- The Inverter can be started and stopped by opening and closing the magnetic contactor on the primary side. Frequently opening and closing the magnetic contactor, however, may cause the Inverter to break down. Start and stop the Inverter at most once every 30 minutes.
- When the Inverter is operated with the Digital Operator, automatic operation cannot be performed after recovery from a power interruption.
- If the Braking Resistor Unit is used, program the sequence so that the magnetic contactor is turned OFF by the contact of the Unit's thermal overload relay.

Connecting Input Power Supply to the Terminal Block

Input power supply can be connected to any terminal R, S or T on the terminal block; the phase sequence of input power supply is irrelevant to the phase sequence.

Installing an AC Reactor

If the Inverter is connected to a large-capacity power transformer (600 kW or more) or the phase advancing capacitor is switched, an excessive peak current may flow through the input power circuit, causing the converter unit to break down.

To prevent this, install an optional AC Reactor on the input side of the Inverter or a DC reactor to the DC reactor connection terminals.

This also improves the power factor on the power supply side.

Installing a Surge Absorber

Always use a surge absorber or diode for inductive loads near the Inverter. These inductive loads include magnetic contactors, electromagnetic relays, solenoid valves, solenoids, and magnetic brakes.

Installing a Noise Filter on Power Supply Side

Installing a noise filter eliminates noise transmitted from the power line to the Inverter, and reduces noise from the inverter to the power line.

- Correct Noise Filter Installation

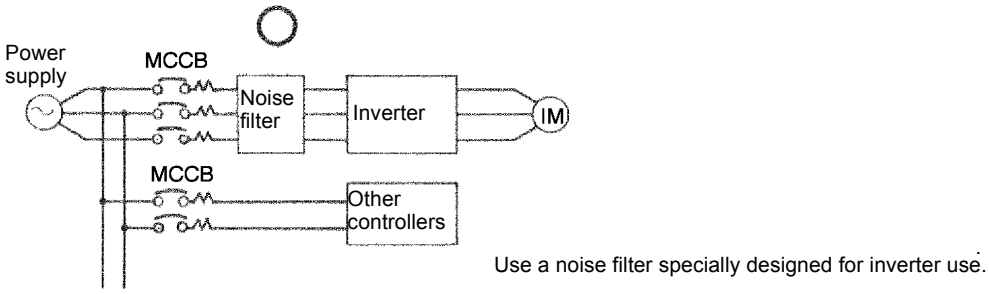

Fig 2.7 Correct Power supply Noise Filter Installation

- Incorrect Noise Filter Installation

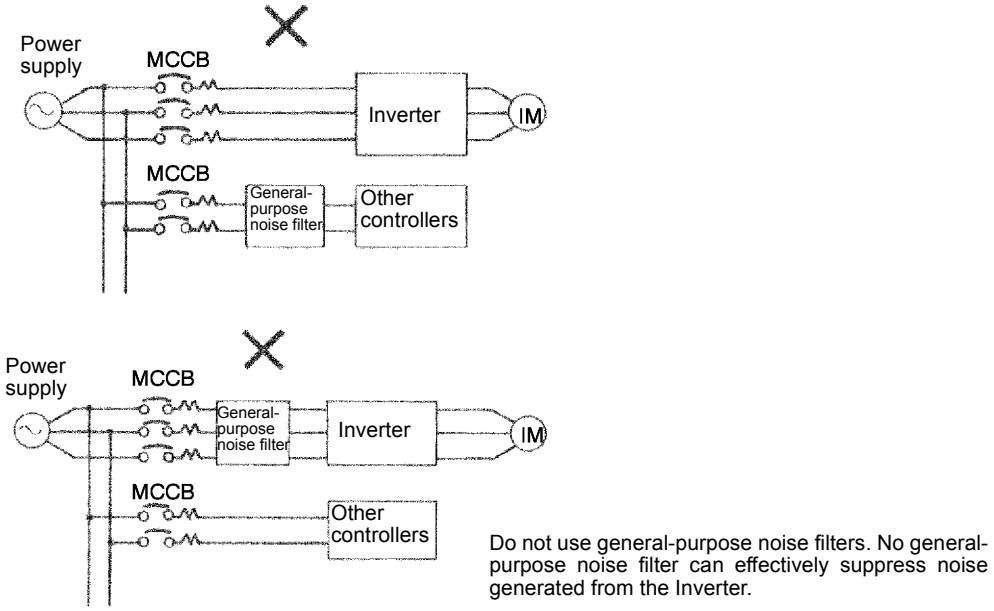

Fig 2.8 Incorrect Power supply Noise Filter Installation

■Wiring the Output Side of Main Circuit

Observe the following precautions when wiring the main output circuits.

Connecting the Inverter and Motor

Connect output terminals U, V, and W to motor lead wires U, V, and W, respectively.

Check that the motor rotates forward with the forward run command. Switch over any two of the output terminals to each other and reconnect if the motor rotates in reverse with the forward run command.

Never Connect a Power Supply to Output Terminals

Never connect a power supply to output terminals U, V, and W. If voltage is applied to the output terminals, the internal circuits of the Inverter will be damaged.

Never Short or Ground Output Terminals

If the output terminals are touched with bare hands or the output wires come into contact with the Inverter casing, an electric shock or ground fault will occur. This is extremely hazardous. Do not short the output wires.

Do Not Use a Phase Advancing Capacitor or Noise Filter

Never connect a phase advancing capacitor or LC/RC noise filter to an output circuit. The high-frequency components of the Inverter output may result in overheating or damage to these part or may result in damage to the Inverter or cause other parts to burn.

Do Not Use an Electromagnetic Switch

Never connect an electromagnetic switch (MC) between the Inverter and motor. If the MC is turned ON while the Inverter is operating, a large inrush current will be created and the over current protection in the Inverter will operate.

When using an MC to switch to a commercial power supply, stop the Inverter and motor before operating the MC. Use the speed search function if the MC is operated during operation. If measures for momentary power interrupts are required, use a delayed release MC.

Installing a Thermal Overload Relay

This Inverter has an electronic thermal protection function to protect the motor from overheating. If, however, more than one motor is operated with one Inverter or a multi-polar motor is used, always install a thermal relay (THR) between the Inverter and the motor and set L1-01 to 0 (no motor protection). The sequence should be designed so that the contacts of the thermal overload relay turn OFF the magnetic contactor on the main circuit inputs.

Installing a Noise Filter on Output Side

Connect a noise filter to the output side of the Inverter to reduce radio noise and inductive noise.

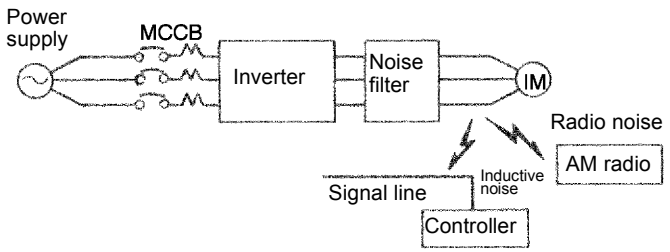

Inductive Noise: Electromagnetic induction generates noise on the signal line, causing the controller to malfunction.

Radio Noise: Electromagnetic waves from the Inverter and cables cause the broadcasting radio receiver to make noise.

Fig 2.9 Installing a Noise Filter on the Output Side

Countermeasures Against Inductive Noise

As described previously, a noise filter can be used to prevent inductive noise from being generated on the output side. Alternatively, cables can be routed through a grounded metal pipe to prevent inductive noise. Keeping the metal pipe at least 30 cm away from the signal line considerably reduces inductive noise.

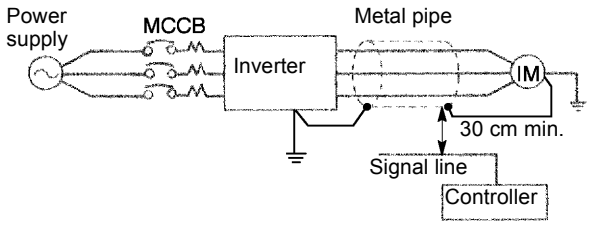

Fig 2.10 Countermeasures Against Inductive Noise

Countermeasures Against Radio Interference

Radio noise is generated from the Inverter as well as from the input and output lines. To reduce radio noise, install noise filters on both input and output sides, and also install the Inverter in a totally enclosed steel box.

The cable between the Inverter and the motor should be as short as possible.

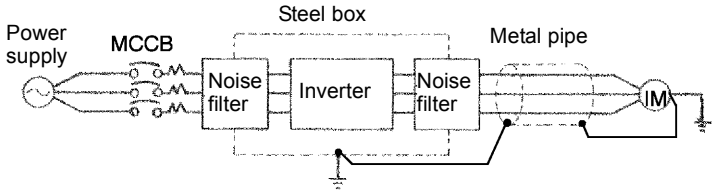

Fig 2.11 Countermeasures Against Radio Interference

Cable Length between Inverter and Motor

If the cable between the Inverter and the motor is long, the high-frequency leakage current will increase, causing the Inverter output current to increase as well. This may affect peripheral devices. To prevent this, adjust the carrier frequency (set in C6-01, C6-02) as shown in *Table 2.6*. (For details, refer to *Chapter 5 User Constants*.)

Table 2.6 Cable Length between Inverter and Motor

Cable length	50 m max.	100 m max.	More than 100 m
Carrier frequency	15 kHz max.	10 kHz max.	5 kHz max.
C6-01 Setting	1	1	1
C6-02 Setting	0~6	0~4	0~2

■Ground Wiring

Observe the following precautions when wiring the ground line.

- Always use the ground terminal of the 200 V Inverter with a ground resistance of less than 100 Ω and that of the 400 V Inverter with a ground resistance of less than 10 Ω.
- Do not share the ground wire with other devices, such as welding machines or power tools.
- Always use a ground wire that complies with technical standards on electrical equipment and minimize the length of the ground wire.
  Leakage current flows through the Inverter. Therefore, if it is not properly grounded, potential on the ground terminal of the Inverter will become unstable.
- When using more than one Inverter, be careful not to loop the ground wire.

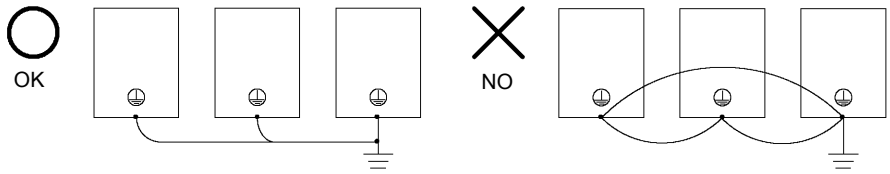

Fig 2.12 Ground Wiring

■Connecting the Braking Resistor (ERF)

A Braking Resistor that mounts to the Inverter can be used with 200 V and 400 V Class Inverters with outputs from 0.4 to 11 kW.

Connect the braking resistor as shown in *Fig 2.13*. When using a braking resistor, set the constants according to Table 2.7.

Table 2.7

L8-01 (Protect selection for internal DB resistor)	1 (Enables overheat protection)
L3-04 (Stall prevention selection during deceleration) (Select either one of them.)	0 (Disables stall prevention function)
	3 (Enables stall prevention function with braking resistor)

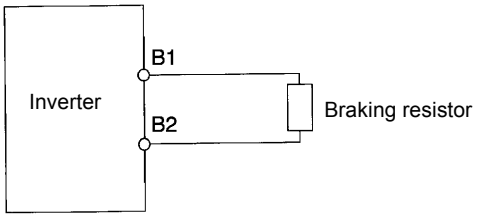

Fig 2.13 Connecting the Braking Resistor

IMPORTANT

The braking resistor connection terminals are B1 and B2. Do not connect to any other terminals. Connecting to any terminals other than B1 or B2 can cause the resistor to overheat, resulting in damage to the equipment.

■Connecting the Braking Resistor Unit (LKEB) and Braking Unit (CDBR)

Connect the Braking Resistor Unit and Braking Unit to the Inverter as shown in the *Fig 2.13*.

When using a braking resistor unit, set the constants according to Table 2.8.

A Braking Resistor that mounts to the Inverter can also be used with Inverters with outputs from 0.4 to 5.5 kW.

Table 2.8

L8-01 (Protect selection for internal DB resistor)	0 (Disables overheat protection)
L3-04 (Stall prevention selection during deceleration) (Select either one of them.)	0 (Disables stall prevention function)
	3 (Enables stall prevention function with braking resistor)

L8-01 is used when a braking resistor without thermal overload relay trip contacts (ERF type mounted to Inverter) is connected.

If L3-04 is set to 1 (stall prevention enabled), the braking resistor unit is not used, and the deceleration time is not decreased.

To prevent the Unit from overheating, design the sequence to turn OFF the power supply for the thermal overload relay trip contacts of the Unit as shown in *Fig 2.14*.

200 V and 400 V Class Inverters with 0.4 to 18.5 kW Output

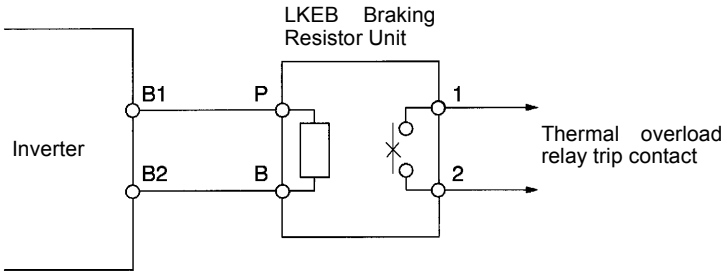

200 V and 400 V Class Inverters with 22 kW or higher Output

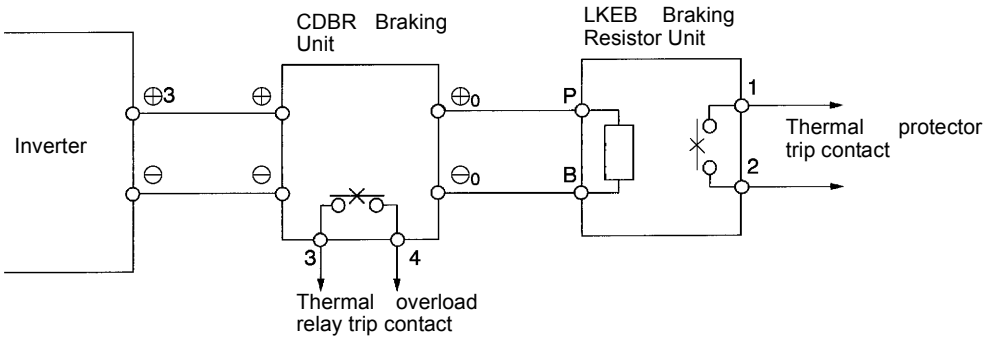

Fig 2.14 Connecting the Braking Resistor Unit and Braking Unit

Connecting Braking Units in Parallel

When connecting two or more Braking Units in parallel, use the wiring and connectors shown in *Fig 2.15*. There are connectors for selecting whether each Braking Unit is to be a Master or Slave. Select “Master” for the first Braking Unit only, and select “Slave” for all other Braking Units (i.e., from the second Unit onwards).

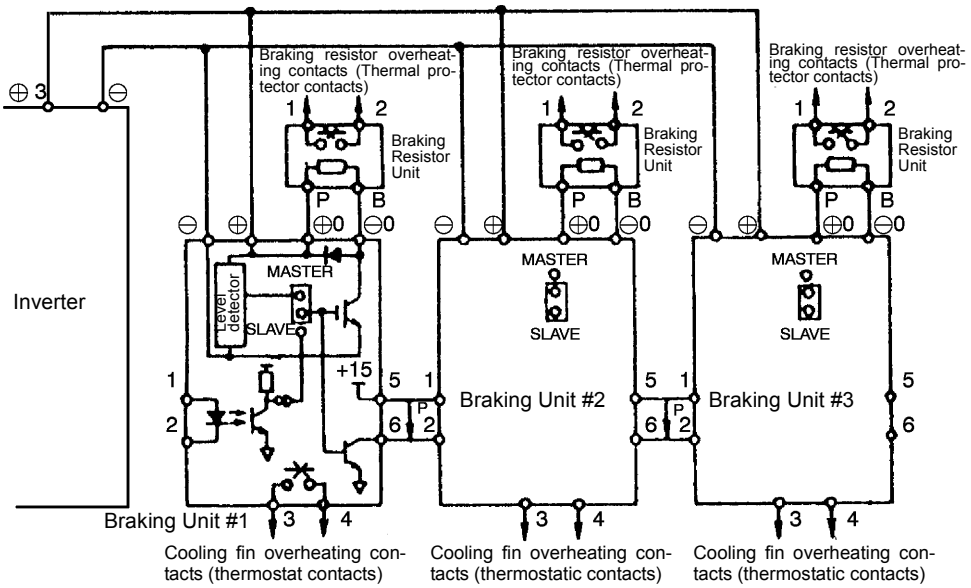

Fig 2.15 Connecting Braking Units in Parallel

Breaking Unit Application Precautions

When using a Braking Resistor Unit, create a sequence to detect overheating of the braking resistor and turn OFF the power supply to the Inverter.

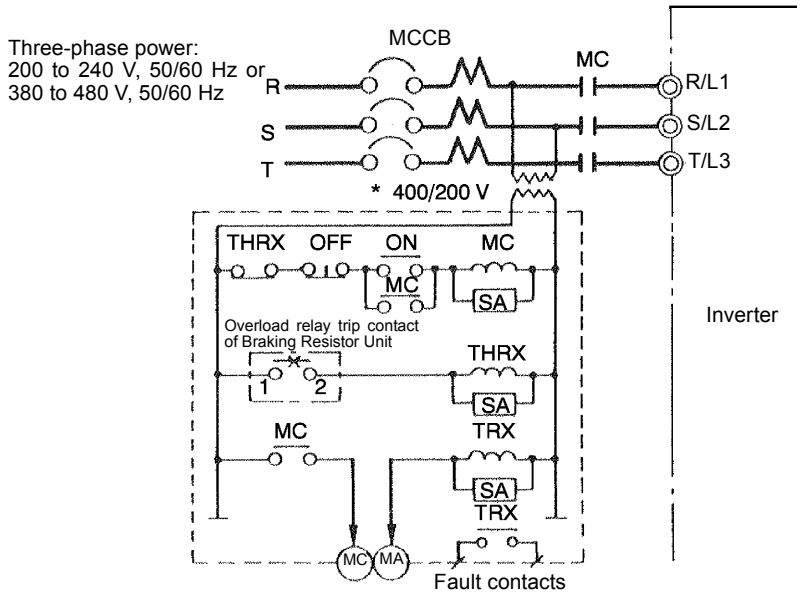

* Use a transformer with 200 and 400 V outputs for the power 400 V Inverter.

Fig 2.16 Power Shutoff Sequence

Wiring Control Circuit Terminals

◆ Wire Sizes and Closed-loop Connectors

For remote operation using analog signals, keep the control line length between the Digital Operator or operation signals and the Inverter to 50 m or less, and separate the lines from high-power lines (main circuits or relay sequence circuits) to reduce induction from peripheral devices.

When setting frequencies from an external frequency setter (and not from a Digital Operator), used shielded twisted-pair wires and ground the shield to terminal E (G), as shown in the following diagram.

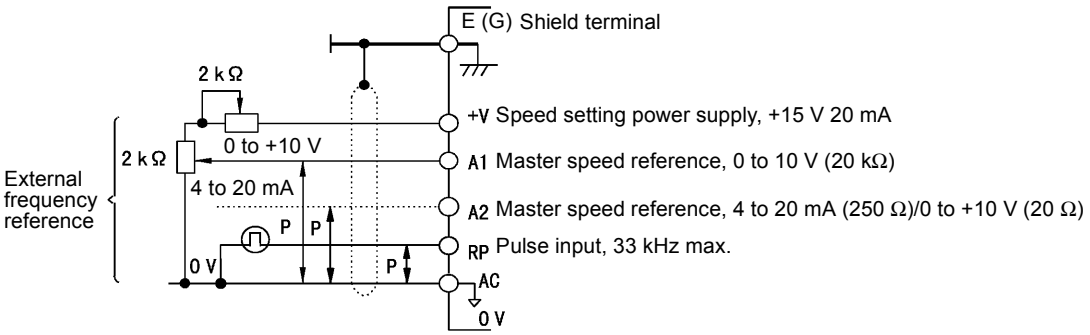

Fig 2.17

Terminal numbers and wire sizes are shown in *Table 2.9*.

Table 2.9 Terminal Numbers and Wire Sizes (Same for all Models)

Terminals	Terminal Screws	Tightening Torque (N•m)	Possible Wire Sizes mm^2(AWG)	Recommended Wire Size mm^2(AWG)	Wire Type
FM, AC, AM, P1, P2, PC, SC, A1, A2, +V, S1, S2, S3, S4, S5, S6, S7 MA, MB, MC, M1, M2	M3.5	0.8 to 1.0	0.5 to 2*2 (20 to 14)	0.75 (18)	• Shielded, twisted-pair wire*1 • Shielded, polyethylene-covered, vinyl sheath cable (KPEV-S by Hitachi Electrical Wire or equivalent)
MP, RP, R+, R-, S+, S-, IG	Phoenix type	0.5 to 0.6	Single wire*3: 0.14 to 2.5 Stranded wire: 0.14 to 1.5 (26 to 14)	0.75 (18)	
E (G)	M3.5	0.8 to 1.0	0.5 to 2*2 (20 to 14)	1.25 (12)	

* 1. Use shielded twisted-pair cables to input an external frequency reference.
* 2. Refer to *Table 2.3 Close-loop Connector Sizes* for suitable closed-loop crimp terminal sizes for the wires.
* 3. We recommend using straight solder less terminal on signal lines to simplify wiring and improve reliability.

■ Straight Solder less Terminals for Signal Lines

Models and sizes of straight solder less terminal are shown in the following table.

Table 2.10 Straight Solder less Terminal Sizes

Wire Size mm^2 (AWG)	Model	d1	d2	L	Manufacturer
0.25 (24)	AI 0.25 - 8YE	0.8	2	12.5	Phoenix Contact
0.5 (20)	AI 0.5 - 8WH	1.1	2.5	14	
0.75 (18)	AI 0.75 - 8GY	1.3	2.8	14	
1.25 (16)	AI 1.5 - 8BK	1.8	3.4	14	
2 (14)	AI 2.5 - 8BU	2.3	4.2	14	

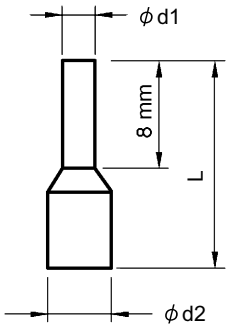

Fig 2.18 Straight Solder less Terminal Sizes

■Wiring Method

Use the following procedure to connect wires to the terminal block.

1. Loosen the terminal screws with a thin-slot screwdriver.
2. Insert the wires from underneath the terminal block.
3. Tighten the terminal screws firmly.

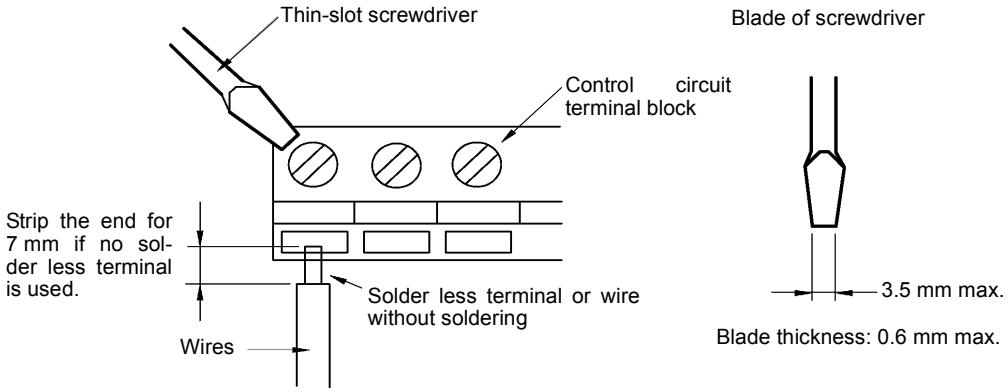

Fig 2.19 Connecting Wires to Terminal Block

◆ Control Circuit Terminal Functions

The functions of the control circuit terminals are shown in *Table 2.11*. Use the appropriate terminals for the correct purposes.

Table 2.11 Control Circuit Terminals

Type	No.	Signal Name	Function		Signal Level
Sequence input signals	S1	Forward run/stop command	Forward run when ON; stopped when OFF.		24 VDC, 8 mA Photo coupler isolation
	S2	Reverse run/stop command	Reverse run when ON; stopped when OFF.		
	S3	External fault input*1	Fault when ON.	Functions are selected by setting H1-01 to H1-05.	
	S4	Fault reset*	Reset when ON		
	S5	Multi-step speed reference 1*1 (Master/auxiliary switch)	Auxiliary frequency reference when ON.		
	S6	Multi-step speed reference 2*1	Multi-step setting 2 when ON.		
	S7	Jog frequency reference*1	Jog frequency when ON.		
	SC	Sequence input common	-		-
Analog input signals	+V	15 V power output	15 V power supply for analog references		15 V (Max. current: 20 mA)
	A1	Frequency reference	0 to +10 V/100%		0 to +10 V(20 kΩ)
	A2	Multi-function analog input	4 to 20 mA/100% 0 to +10 V/100%	Function is selected by setting H3-09.	4 to 20 mA(250Ω) 0 to +10 V(20kΩ)
	AC	Analog reference common	-		-
	E(G)	Shield wire, optional ground line connection point	-		-
Sequence output signals	M1	During run signal (1NO contact)	ON when during run.	Multi-function contact outputs	Dry contacts Contact capacity: 1 A max. at 250 VAC 1 A max. at 30 VDC
	M2				
	P1	Zero speed	On when zero level (b2-01) or below	Multi-function PHC outputs	Open-collector output 50 mA max. at 48 V*2
	P2	Speed agreement detection	ON when within ±2 Hz of set frequency.		
	PC	Open-collector output common	-		-
	MA	Fault output signal (form C)	CLOSED across MA and MC when fault occurs. OPEN across MB and MC when fault occurs		Dry contacts Contact capacity: 1 A max. at 250 VAC 1 A max. at 30 VDC
	MB				
	MC				

Table 2.11 Control Circuit Terminals (Continued)

Type	No.	Signal Name	Function		Signal Level
Analog output signals	FM	Multi-function analog output (frequency output)	0 to +10 V/100% frequency	Multi-function analog monitor 1	0 to +10 V max. ±5% 2 mA max.
	AC	Analog common (copy)	-		
	AM	Multi-function analog output (current monitor)	5 V/Inverter's rated current	Multi-function analog monitor 2	
Pulse I/O	RP	Pulse input*3	H6-01 (Frequency reference input)		0 to 32 kHz (3 kΩ) High level voltage 3.5 to 13.2 V
	MP	Pulse monitor	H6-06 (Output frequency)		0 to 32 kHz +5 V output (Load: 1.5 kΩ)
RS-485/422	R+	MEMOBUS communications input	For 2-wire RS-485, short R+ and S+ as well as R- and S-.		Differential input, PHC isolation
	R-				
	S+	MEMOBUS communications output			Differential input, PHC isolation
	S-				
	IG	Signal common	-		-

* 1. The default settings are given for terminals S3 to S7. For a 3-wire sequence, the default settings are a 3-wire sequence for S5, multi-step speed setting 1 for S6 and multi-step speed setting 2 for S7.

* 2. When driving a reactive load, such as a relay coil, always insert a flywheel diode as shown in *Fig 2.20*.

* 3. Pulse input specifications are given in the following table.

Low level voltage	0.0 to 0.8 V
High level voltage	3.5 to 13.2 V
H duty	30% to 70%
Pulse frequency	0 to 32 kHz

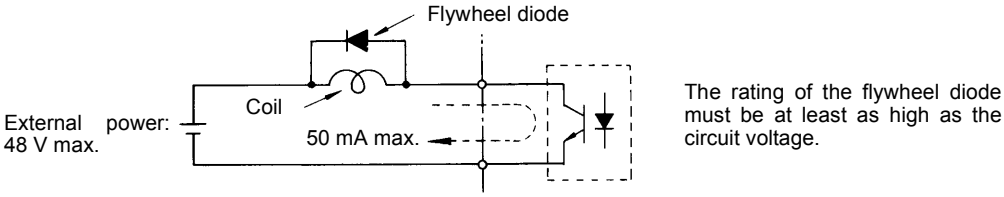

Fig 2.20 Flywheel Diode Connection

■Shunt Connector CN5 and DIP Switch S1

The shunt connector CN 5 and DIP switch S1 are described in this section.

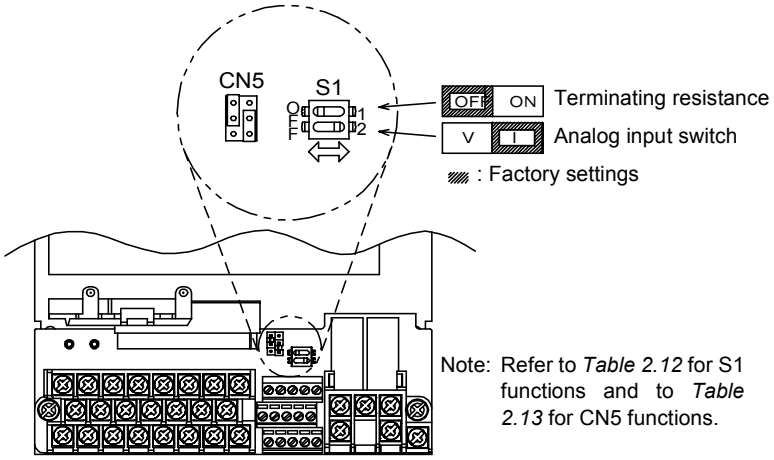

Fig 2.21 Shunt Connector CN5 and DIP Switch S1

The functions of DIP switch S1 are shown in the following table.

Table 2.12 DIP Switch S1

Name	Function	Setting
S1-1	RS-485 and RS-422 terminating resistance	OFF: No terminating resistance ON: Terminating resistance of 110 Ω
S1-2	Input method for analog input A2	OFF: 0 to 10 V (internal resistance: 20 kΩ) ON: 4 to 20 mA (internal resistance: 250 Ω)

■ Sinking/Sourcing Mode

The input terminal logic can be switched between sinking mode (0-V common) and sourcing mode (+24-V common) if shunt connector CN5 is used. An external 24-V power supply is also supported, providing more freedom in signal input methods.

Table 2.13 Sinking/Sourcing Mode and Input Signals

	Internal Power Supply	External Power Supply
Sinking Mode	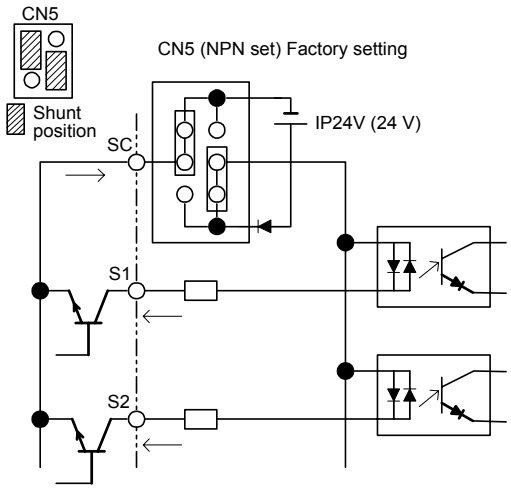	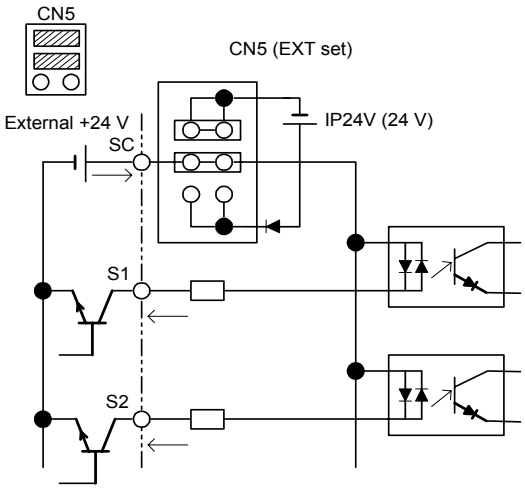
Sourcing Mode	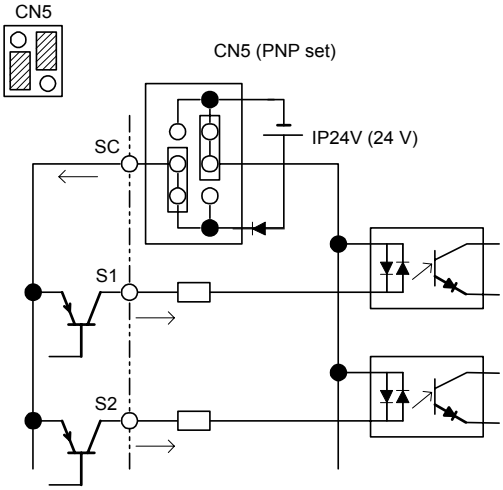	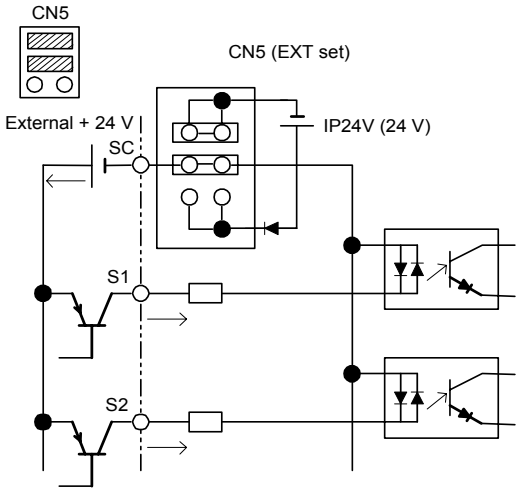

◆ Control Circuit Terminal Connections

Connections to Inverter control circuit terminals are shown in *Fig 2.22*.

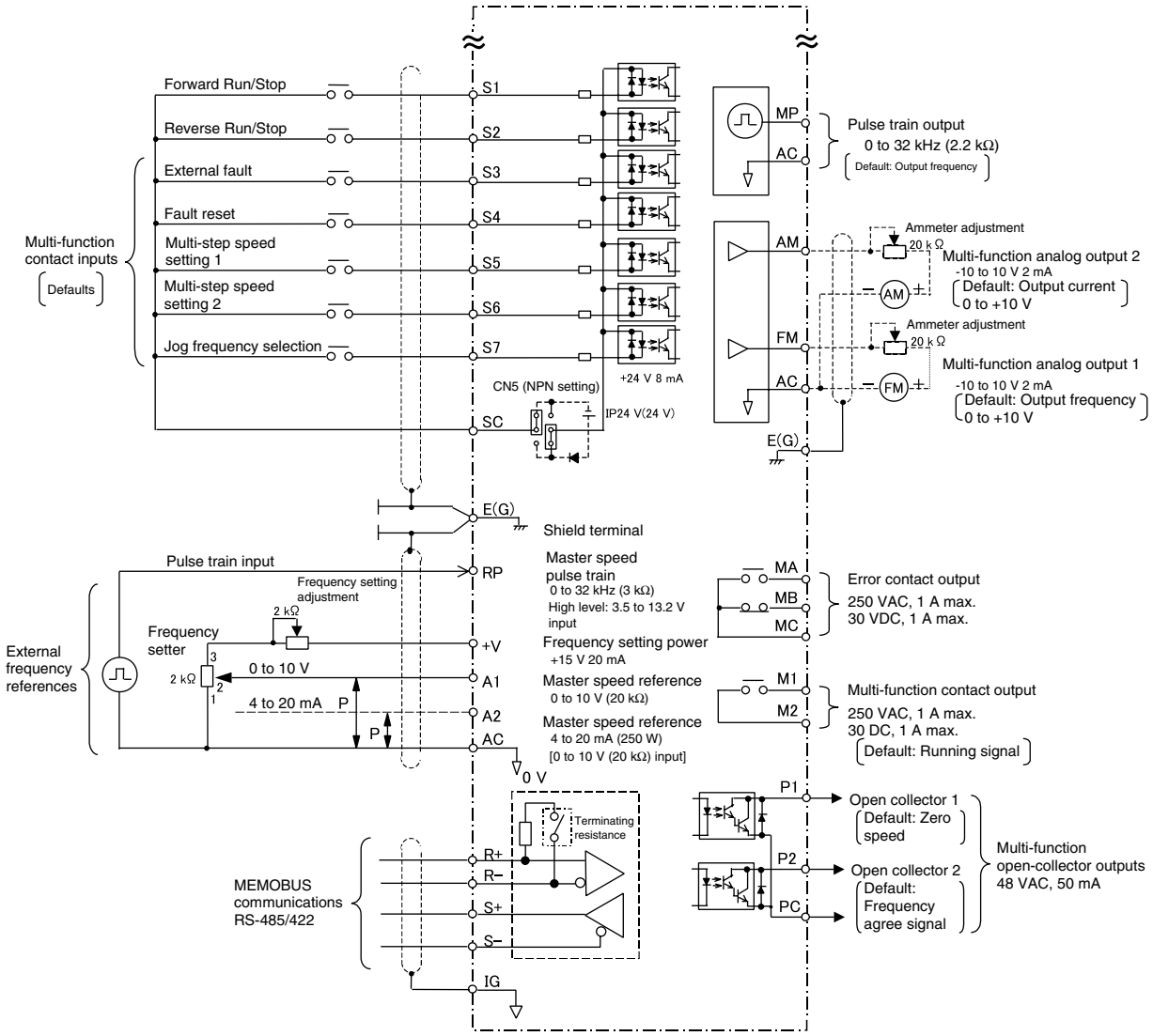

Fig 2.22 Control Circuit Terminal Connections

◆ Control Circuit Wiring Precautions

Observe the following precautions when wiring control circuits.

- Separate control circuit wiring from main circuit wiring (terminals R/L1, S/L2, T/L3, B1, B2, U/T1, V/T2, W/T3, ⊖, ⊕1, ⊕2, and ⊕3) and other high-power lines.
- Separate wiring for control circuit terminals MA, MB, MC, M1, and M2 (contact outputs) from wiring to other control circuit terminals.
- If using an optional external power supply, it shall be a UL Listed Class 2 power supply source.
- Use twisted-pair or shielded twisted-pair cables for control circuits to prevent operating faults. Process cable ends as shown in *Fig 2.23*.
- Connect the shield wire to terminal E (G).
- Insulate the shield with tape to prevent contact with other signal lines and equipment.

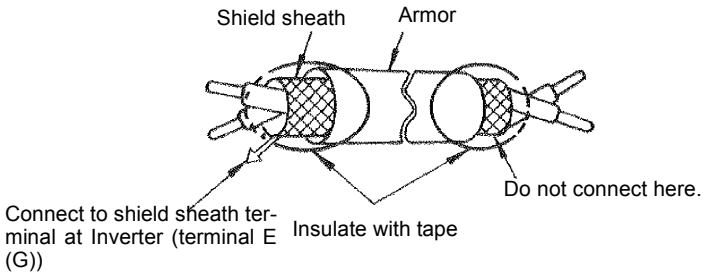

Fig 2.23 Processing the Ends of Twisted-pair Cables

Wiring Check

◆ Checks

Check all wiring after wiring has been completed. Perform the following checks on the wiring.

- Is all wiring correct?
- Have any wire clippings, screws, or other foreign material been left in the inverter drive?
- Are all screws tight?
- Are any wire ends contacting other terminals?

Installing and Wiring Option Cards

◆ Option Card Models and Specifications

Up to three Option Cards can be mounted in the Inverter. You can mount up one Card into each of the three places on the controller card (A, C, and D) shown in *Fig 2.24*.

Table 2.14 lists the type of Option Cards and their specifications.

Table 2.14 Option Card Specifications

Card	Model	Specifications	Mounting Location
PG Speed Control Cards	PG-A2	Serial open-collector/complimentary inputs	A
	PG-B2	Phase A/B complimentary inputs	A
	PG-D2	Single line-driver inputs	A
	PG-X2	Phase A/B line-driver inputs	A
DeviceNet Communications Card	SI-N	DeviceNet communications support	C
Profibus-DP Communications Card	SI-P	Profibus-DP communications support	C
InterBus-S Communications Card	SI-R	InterBus-S communications support	C
Analog Monitor Card	AO-08	8-bit analog outputs, 2 channels	D
	AO-12	12-bit analog outputs, 2 channels	D
Digital Output Card	DO-08	Six photo coupler outputs and 2 relay outputs	D
	DO-02C	2 relay outputs	D

◆ Installation

Before mounting an Option Card, remove the terminal cover and be sure that the charge indicator inside the Inverter is not lit. After confirming that the charge indicator is not lit, remove the Digital Operator and front cover and then mount the Option Card.

Refer to documentation provided with the Option Card for actual mounting instructions for option slots A, C, and D.

■ Preventing C and D Option Card Connectors from Rising

After installing an Option Card into slot C or D, insert an Option Clip to prevent the side with the connector from rising. The Option Clip can be easily removed by holding onto the protruding portion of the Clip and pulling it out.

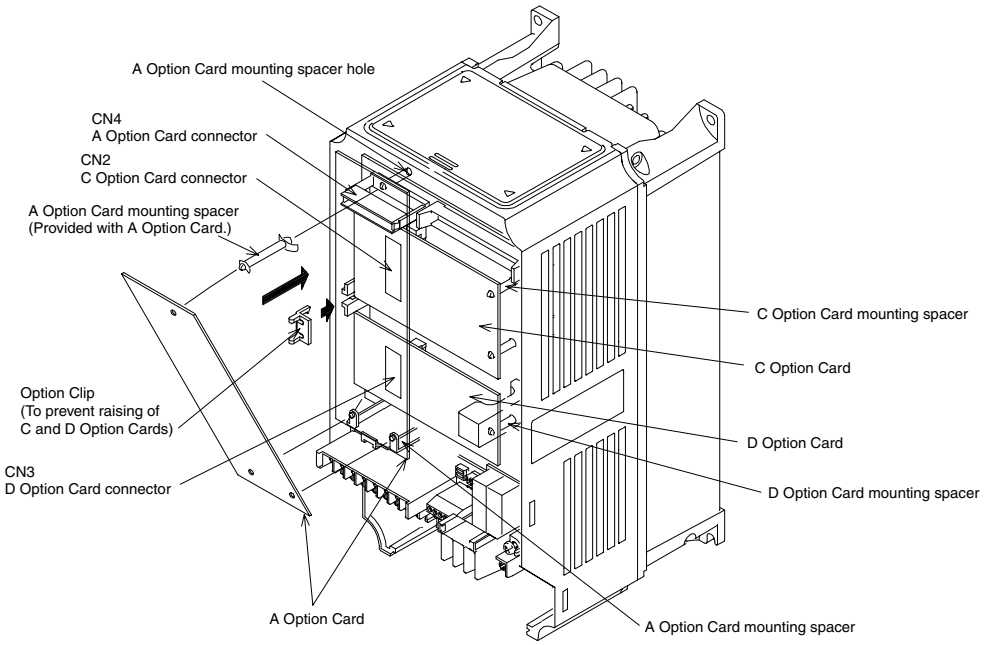

Fig 2.24 Mounting Option Cards

◆ PG Speed Control Card Terminals and Specifications

The terminal specifications for the PG Speed Control Cards are given in the following tables.

■PG-A2

The terminal specifications for the PG-A2 are given in the following table.

Table 2.15 PG-A2 Terminal Specifications

Terminal	No.	Contents	Specifications
TA1	1	Power supply for pulse generator	12 VDC (±5%), 200 mA max.
	2		0 VDC (GND for power supply)
	3	+12 V/open collector switching terminal	Terminal for switching between12 V voltage input and open collector input. For open collector input, short across 3 and 4.
	4		
	5	Pulse input terminal	H: +4 to 12 V; L: +1 V max. (Maximum response frequency: 30 kHz)
	6		Pulse input common
	7	Pulse motor output terminal	12 VDC (±10%), 20 mA max.
	8		Pulse monitor output common
TA2	(E)	Shield connection terminal	-

■PG-B2

The terminal specifications for the PG-B2 are given in the following table.

Table 2.16 PG-B2 Terminal Specifications

Terminal	No.	Contents	Specifications
TA1	1	Power supply for pulse generator	12 VDC (±5%), 200 mA max.
	2		0 VDC (GND for power supply)
	3	A-phase pulse input terminal	H: +8 to 12 V L: +1 V max. (Maximum response frequency: 30 kHz)
	4		Pulse input common
	5	B-phase pulse input terminal	H: +8 to 12 V L: +1 V max. (Maximum response frequency: 30 kHz)
	6		Pulse input common
TA2	1	A-phase monitor output terminal	Open collector output, 24 VDC, 30 mA max.
	2		A-phase monitor output common
	3	B-phase monitor output terminal	Open collector output, 24 VDC, 30 mA max.
	4		B-phase monitor output common
TA3	(E)	Shield connection terminal	-

■PG-D2

The terminal specifications for the PG-D2 are given in the following table.

Table 2.17 PG-D2 Terminal Specifications

Terminal	No.	Contents	Specifications
TA1	1	Power supply for pulse generator	12 VDC (±5%), 200 mA max.*
	2		0 VDC (GND for power supply)
	3		5 VDC (±5%), 200 mA max.*
	4	Pulse input + terminal	Line driver input (RS-422 level input) Maximum response frequency: 300 kHz
	5	Pulse input - terminal	
	6	Common terminal	-
	7	Pulse monitor output + terminal	Line driver output (RS-422 level output)
	8	Pulse monitor output - terminal	
TA2	(E)	Shield connection terminal	-

* 5 VDC and 12 VDC cannot be used at the same time.

■PG-X2

The terminal specifications for the PG-X2 are given in the following table.

Table 2.18 PG-X2 Terminal Specifications

Terminal	No.	Contents	Specifications
TA1	1	Power supply for pulse generator	12 VDC (±5%), 200 mA max.*
	2		0 VDC (GND for power supply)
	3		5 VDC (±5%), 200 mA max.*
	4	A-phase + input terminal	Line driver input (RS-422 level input) Maximum response frequency: 300 kHz
	5	A-phase - input terminal	
	6	B-phase + input terminal	
	7	B-phase - input terminal	
	8	Z-phase + input terminal	
	9	Z-phase - input terminal	
	10	Common terminal	0 VDC (GND for power supply)
TA2	1	A-phase + output terminal	Line driver output (RS-422 level output)
	2	A-phase - output terminal	
	3	B-phase + output terminal	
	4	B-phase - output terminal	
	5	Z-phase + output terminal	
	6	Z-phase - output terminal	
	7	Control circuit common	Control circuit GND
TA3	(E)	Shield connection terminal	-

* 5 VDC and 12 VDC cannot be used at the same time.

◆ Wiring

Wiring examples are provided in the following illustrations for the Control Cards.

■ Wiring the PG-A2

Wiring examples are provided in the following illustrations for the PG-A2.

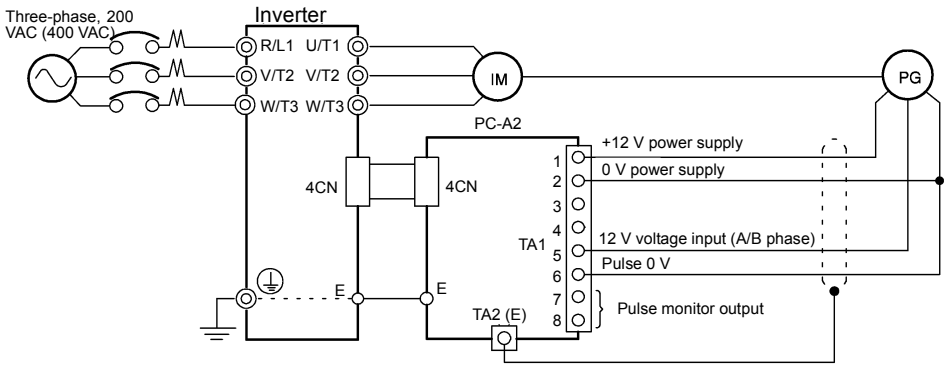

Fig 2.25 Wiring a 12 V Voltage Input

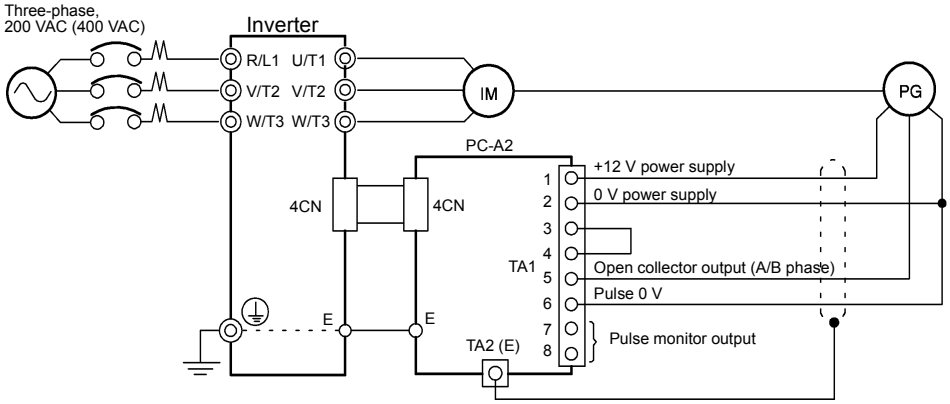

- Shielded twisted-pair wires must be used for signal lines.
- Do not use the pulse generator's power supply for anything other than the pulse generator (encoder). Using it for any other purpose can cause malfunctions due to noise.
- The length of the pulse generator's wiring must not be more than 100 meters.

Fig 2.26 Wiring an Open-collector Input

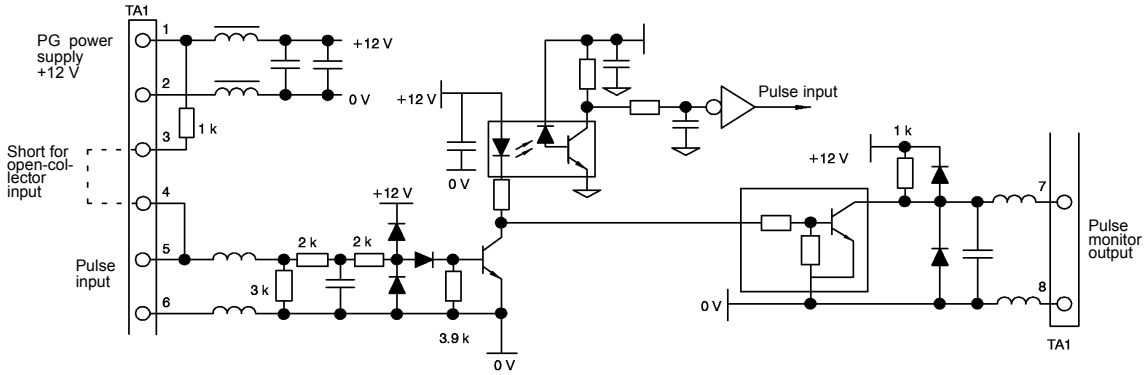

Fig 2.27 I/O Circuit Configuration of the PG-A2

■ Wiring the PG-B2

Wiring examples are provided in the following illustrations for the PG-B2.

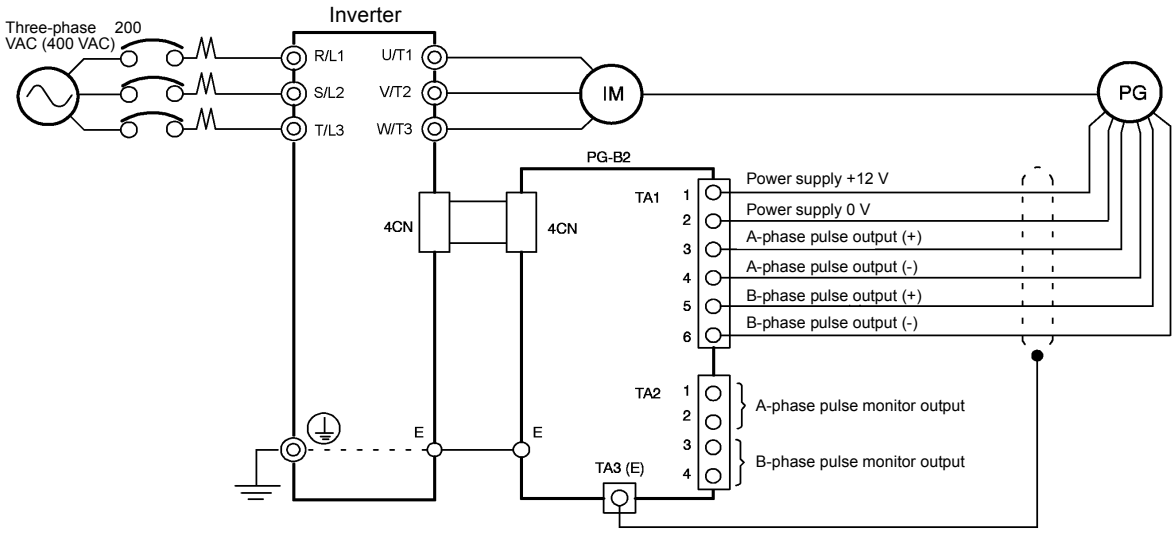

- Shielded twisted-pair wires must be used for signal lines.
- Do not use the pulse generator's power supply for anything other than the pulse generator (encoder). Using it for any other purpose can cause malfunctions due to noise.
- The length of the pulse generator's wiring must not be more than 100 meters.
- The direction of rotation of the PG can be set in user constant F1-05. The factory preset if for forward rotation, A-phase advancement.

Fig 2.28 PG-B2 Wiring

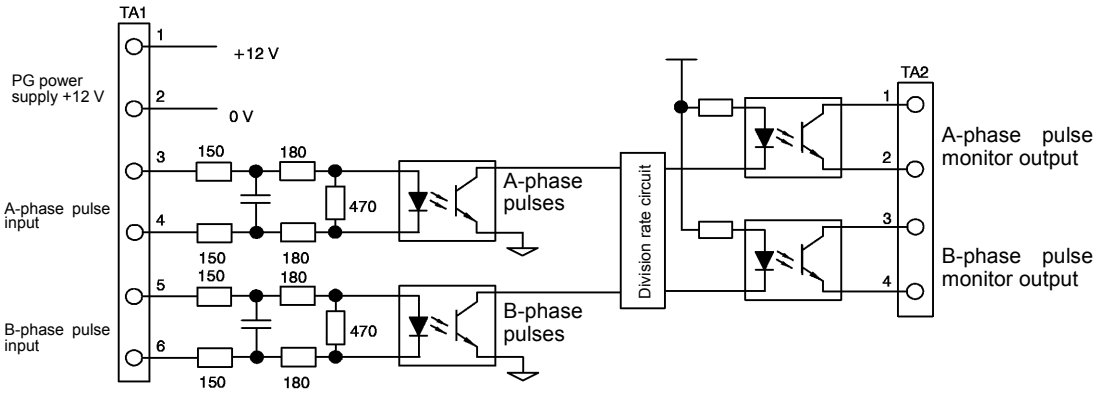

- When connecting to a voltage-output-type PG (encoder), select a PG that has an output impedance with a current of at least 12 mA to the input circuit photo coupler (diode).
- The pulse monitor dividing ratio can be changed using constant F1-06.

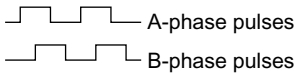

Fig 2.29 I/O Circuit Configuration of the PG-B2

■Wiring the PG-D2

Wiring examples are provided in the following illustrations for the PG-D2.

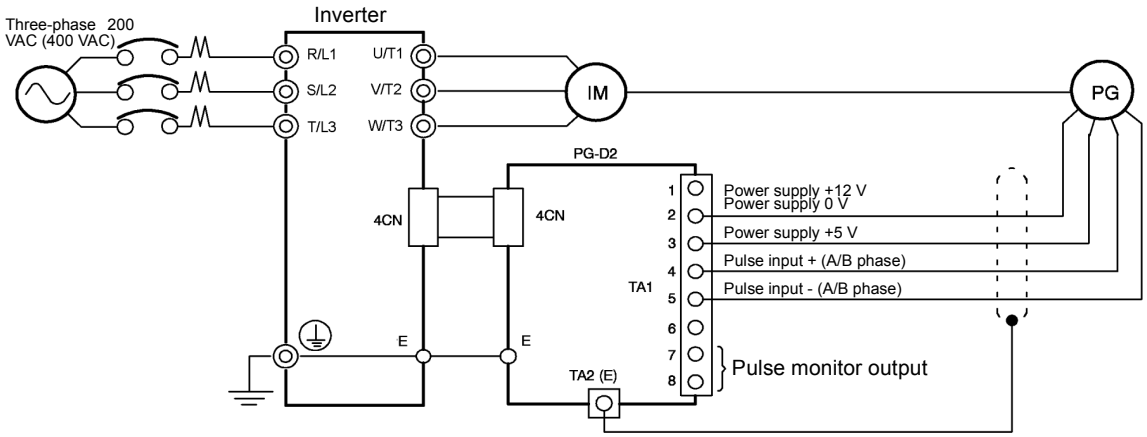

- Shielded twisted-pair wires must be used for signal lines.
- Do not use the pulse generator's power supply for anything other than the pulse generator (encoder). Using it for any other purpose can cause malfunctions due to noise.
- The length of the pulse generator's wiring must not be more than 100 meters.

Fig 2.30 PG-D2 Wiring

■Wiring the PG-X2

Wiring examples are provided in the following illustrations for the PG-X2.

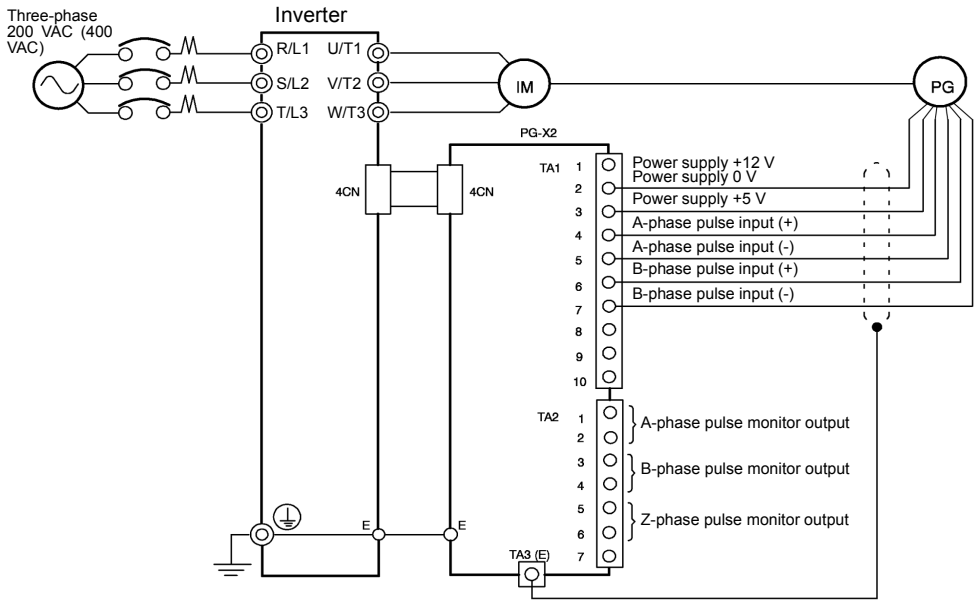

- Shielded twisted-pair wires must be used for signal lines.
- Do not use the pulse generator's power supply for anything other than the pulse generator (encoder). Using it for any other purpose can cause malfunctions due to noise.
- The length of the pulse generator's wiring must not be more than 100 meters.
- The direction of rotation of the PG can be set in user constant F1-05 (PG Rotation). The factory preset if for motor forward rotation, A-phase advancement.

Fig 2.31 PG-X2 Wiring

◆ Wiring Terminal Blocks

Use no more than 100 meters of wiring for PG (encoder) signal lines, and keep them separate from power lines.

Use shielded, twisted-pair wires for pulse inputs and pulse output monitor wires, and connect the shield to the shield connection terminal.

■Wire Sizes (Same for All Models)

Terminal wire sizes are shown in *Table 2.19*.

Table 2.19 Wire Sizes

Terminal	Terminal Screws	Wire Thickness (mm^2)	Wire Type
Pulse generator power supply Pulse input terminal Pulse monitor output terminal	-	Stranded wire: 0.5 to 1.25 Single wire: 0.5 to 1.25	• Shielded, twisted-pair wire • Shielded, polyethylene-covered, vinyl sheath cable (KPEV-S by Hitachi Electric Wire or equivalent)
Shield connection terminal	M3.5	0.5 to 2	

■Straight Solder less Terminals for Control Circuit Terminals

We recommend using straight solder less terminal on signal lines to simplify wiring and improve reliability.

Refer to *Table 2.10 Straight Solder less Terminal Sizes* for specifications.

■Closed-loop Connector Sizes and Tightening Torque

The closed-loop connectors and tightening torques for various wire sizes are shown in *Table 2.20*.

Table 2.20 Closed-loop Connectors and Tightening Torques

Wire Thickness [mm^2]	Terminal Screws	Crimp Terminal Size	Tightening Torque (N • m)
0.5	M3.5	1.25 - 3.5	0.8
0.75		1.25 - 3.5	
1.25		1.25 - 3.5	
2		2 - 3.5	

■Wiring Method and Precautions

The wiring method is the same as the one used for straight solder less terminals. Refer to page 2-26. Observe the following precautions when wiring.

- Separate the control signal lines for the PG Speed Control Card from main circuit lines and power lines.
- Connect the shield when connecting to a PG. The shield must be connected to prevent operational errors caused by noise. Also, do not use any lines that are more than 100 m long. Refer to *Fig 2.23* for details on connecting the shield.
- Connect the shield to the shield terminal (E).
- Do not solder the ends of wires. Doing so may cause contact faults.
- When not using straight solder less terminals, strip the wires to a length of approximately 5.5 mm.

◆ Selecting the Number of PG (Encoder) Pulses

The setting for the number of PG pulses depends on the model of PG Speed Control Card being used. Set the correct number for your model.

■PG-A2/PG-B2

The maximum response frequency is 32,767 Hz.

Use a PG that outputs a maximum frequency of approximately 20 kHz for the rotational speed of the motor.

$$\frac{\text{Motor speed at maximum frequency output (r/min)}}{60} \times \text{PG rating (p/rev)} = 20{,}000 \text{ Hz}$$

Some examples of PG output frequency (number of pulses) for the maximum frequency output are shown in *Table 2.21*.

Table 2.21 PG Pulse Selection Examples

Motor's Maximum Speed (r/min)	PG Rating (p/rev)	PG Output Frequency for Maximum Frequency Output (Hz)
1800	600	18,000
1500	800	20,000
1200	1000	20,000
900	1200	18,000

Note 1. The motor speed at maximum frequency output is expressed as the sync rotation speed.
2. The PG power supply is 12 V.
3. A separate power supply is required if the PG power supply capacity is greater than 200 mA. (If momentary power loss must be handled, use a backup capacitor or other method.)

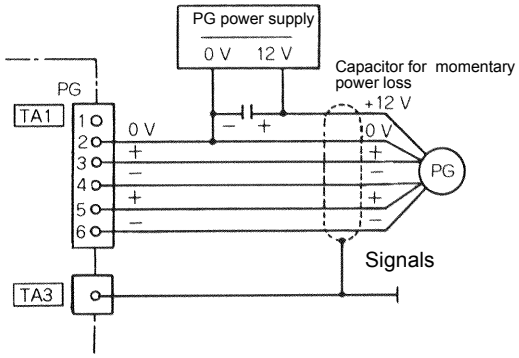

Fig 2.32 PG-B2 Connection Example

Notes: PG-D2/PG-X2

There are 5 V and 12 V PG power supplies.
Check the PG power supply specifications before connecting.

The maximum response frequency is 300 kHz.

Use the following equation to computer the output frequency of the PG (f_{PG}).

$$f_{PG}(\text{Hz}) = \frac{\text{Motor speed at maximum frequency output (r/min)}}{60} \times \text{PG rating (p/rev)}$$

A separate power supply is required if the PG power supply capacity is greater than 200 mA. (If momentary power loss must be handled, use a backup capacitor or other method.)

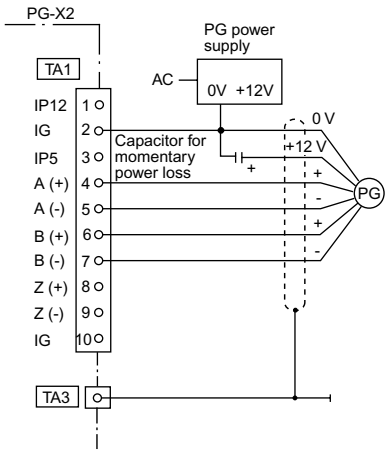

Fig 2.33 PG-X2 Connection Example (for 12 V PG power supply)

3

Digital Operator and Modes

This chapter describes Digital Operator displays and functions, and provides an overview of operating modes and switching between modes.

Digital Operator

This section describes the displays and functions of the Digital Operator.

◆ Digital Operator Display

The key names and functions of the Digital Operator are described below.

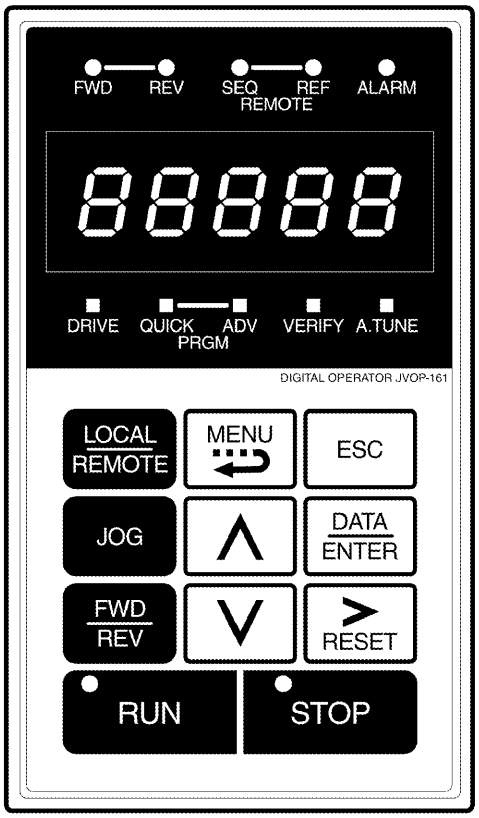

Drive Mode Indicators

FWD: Lit when there is a forward run command input.
REV: Lit when there is a reverse run command input.
SEQ: Lit when the run command from the control circuit terminal is enabled.
REF: Lit when the frequency reference from control circuit terminals A1 and A2 is enabled.
ALARM: Lit when an error or alarm has occurred.

Data Display

Displays monitor data, constant numbers, and settings.

Mode Display

DRIVE: Lit in Drive Mode.
QUICK: Lit in Quick Programming Mode.
ADV: Lit in Advanced Programming Mode.
VERIFY: Lit in Verify Mode.
A. TUNE: Lit in Auto tuning Mode.

Keys

Execute operations such as setting user constants, monitoring, jogging, and auto tuning.

Fig 3.1 Digital Operator Component Names and Functions

◆ Digital Operator Keys

The names and functions of the Digital Operator Keys are described in *Table 3.1*.

Table 3.1 Key Functions

Key	Name	Function
LOCAL/REMOTE	LOCAL/REMOTE Key	Switches between operation via the Digital Operator (LOCAL) and control circuit terminal operation (REMOTE). This Key can be enabled or disabled by setting user constant o2-01.
MENU	MENU Key	Selects menu items (modes).
ESC	ESC Key	Returns to the status before the DATA/ENTER Key was pressed.
JOG	JOG Key	Enables jog operation when the Inverter is being operated from the Digital Operator.
FWD/REV	FWD/REV Key	Selects the rotation direction of the motor when the Inverter is being operated from the Digital Operator.
RESET	Shift/RESET Key	Sets the number of digits for user constant settings. Also acts as the Reset Key when a fault has occurred.
∧	Increment Key	Selects menu items, sets user constant numbers, and increments set values. Used to move to the next item or data.
∨	Decrement Key	Selects menu items, sets user constant numbers, and decrements set values. Used to move to the previous item or data.
DATA/ENTER	DATA/ENTER Key	Pressed to enter menu items, user constants, and set values. Also used to switch from one screen to another.
RUN	RUN Key	Starts the Inverter operation when the Inverter is being controlled by the Digital Operator.
STOP	STOP Key	Stops Inverter operation. This Key can be enabled or disabled when operating from the control circuit terminal by setting user constant o2-02.

Note Except in diagrams, Keys are referred to using the Key names listed in the above table.

There are indicators on the upper left of the RUN and STOP Keys on the Digital Operator. These indicators will light and flash to indicate operating status.

The RUN Key indicator will flash and the STOP Key indicator will light during initial excitation of the dynamic brake. The relationship between the indicators on the RUN and STOP Keys and the Inverter status is shown in the *Fig 3.2*.

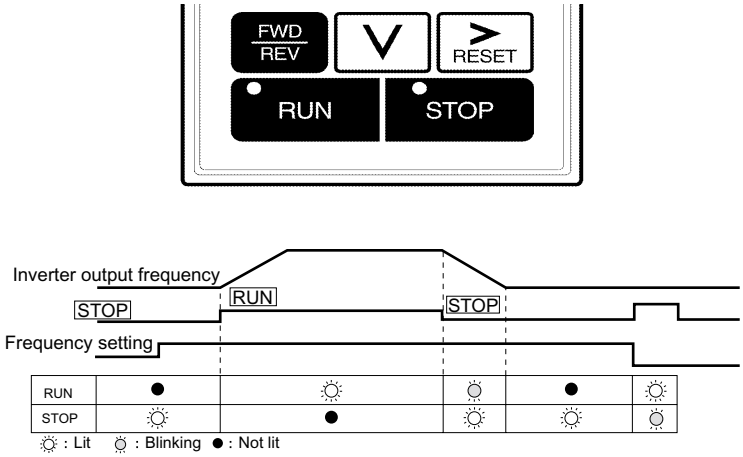

Fig 3.2 RUN and STOP Indicators

Modes

This section describes the Inverter's modes and switching between modes.

◆ Inverter Modes

The Inverter's user constants and monitoring functions are organized in groups called modes that make it easier to read and set user constants.The Inverter is equipped with 5 modes.

The 5 modes and their primary functions are shown in the *Table 3.2*.

Table 3.2 Modes

Mode	Primary function(s)
Drive mode	The Inverter can be run in this mode. Use this mode when monitoring values such as frequency references or output current, displaying fault information, or displaying the fault history.
Quick programming mode	Use this mode to reference and set the minimum user constants to operate the Inverter (e.g., the operating environment of the Inverter and Digital Operator).
Advanced programming mode	Use this mode to reference and set all user constants.
Verify mode	Use this mode to read/set user constants that have been changed from their factory-set values.
Auto tuning mode*	Use this mode when running a motor with unknown motor constants in the vector control mode. The motor constants are calculated and set automatically. This mode can also be used to measure only the motor line-to-line resistance.

* Always perform auto tuning with the motor before operating using vector control. Auto tuning mode will not be displayed during operation or when an error has occurred.

◆ Switching Modes

The mode selection display will appear when the MENU Key is pressed from a monitor or setting display. Press the MENU Key from the mode selection display to switch between the modes.

Press the DATA/ENTER Key from the mode selection key to monitor data and from a monitor display to access the setting display.

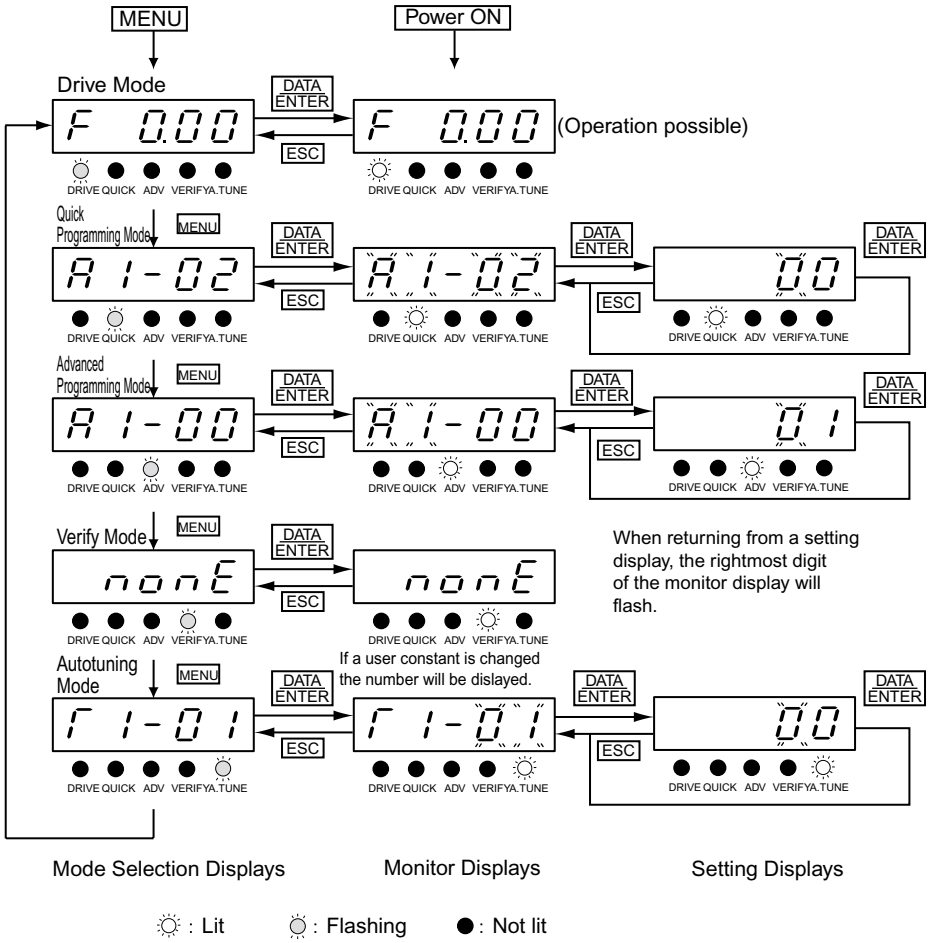

Fig 3.3 Mode Transitions

IMPORTANT

When running the Inverter after using Digital Operator, press the MENU Key to enter the drive mode (DRIVE indicator will flash) and then press the DATA/ENTER Key from the drive mode display to bring up the monitor display (DRIVE indicator will light). Run commands can't be received from any other display. (Monitor display in the drive mode will appear when the power is turned ON.)

◆ Drive Mode

Drive mode is the mode in which the Inverter can be operated. The following monitor displays are possible in drive mode: The frequency reference, output frequency, output current, and output voltage, as well as fault information and the fault history.

When b1-01 (Reference selection) is set to 0, the frequency can be changed from the frequency setting display. Use the Increment, Decrement, and Shift/RESET Keys to change the frequency. The user constant will be written and the monitor display will be returned to when the DATA/ENTER Key is pressed after changing the setting.

■Example Operations

Key operations in drive mode are shown in the following figure.

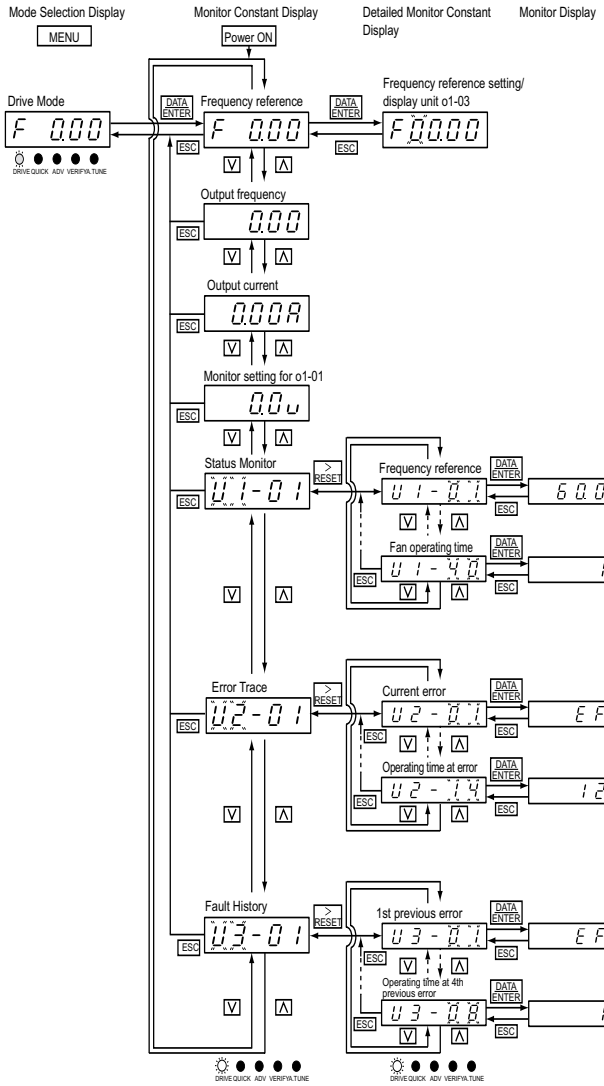

Fig 3.4 Operations in Drive Mode

IMPORTANT

The display for the first monitor constant (frequency reference) will be displayed when power is turned ON.
The monitor item displayed at startup can be set in o1-02 (Monitor Selection after Power Up).
Operation cannot be started from the mode selection display.

◆ Quick Programming Mode

In quick programming mode, the constants required for Inverter test run can be monitored and set.

Constants can be changed from the setting displays. Use the Increment, Decrement, and Shift/RESET Keys to change the constants. When the DATA/ENTER key is pressed after changing the setting, the user constant will be written into the memory, and the display will return to the constant monitor automatically.

Refer to *Chapter 5 User Constants* for details on the constants displayed in quick programming mode.

■Example Operations

Key operations in quick programming mode are shown in the following figure.

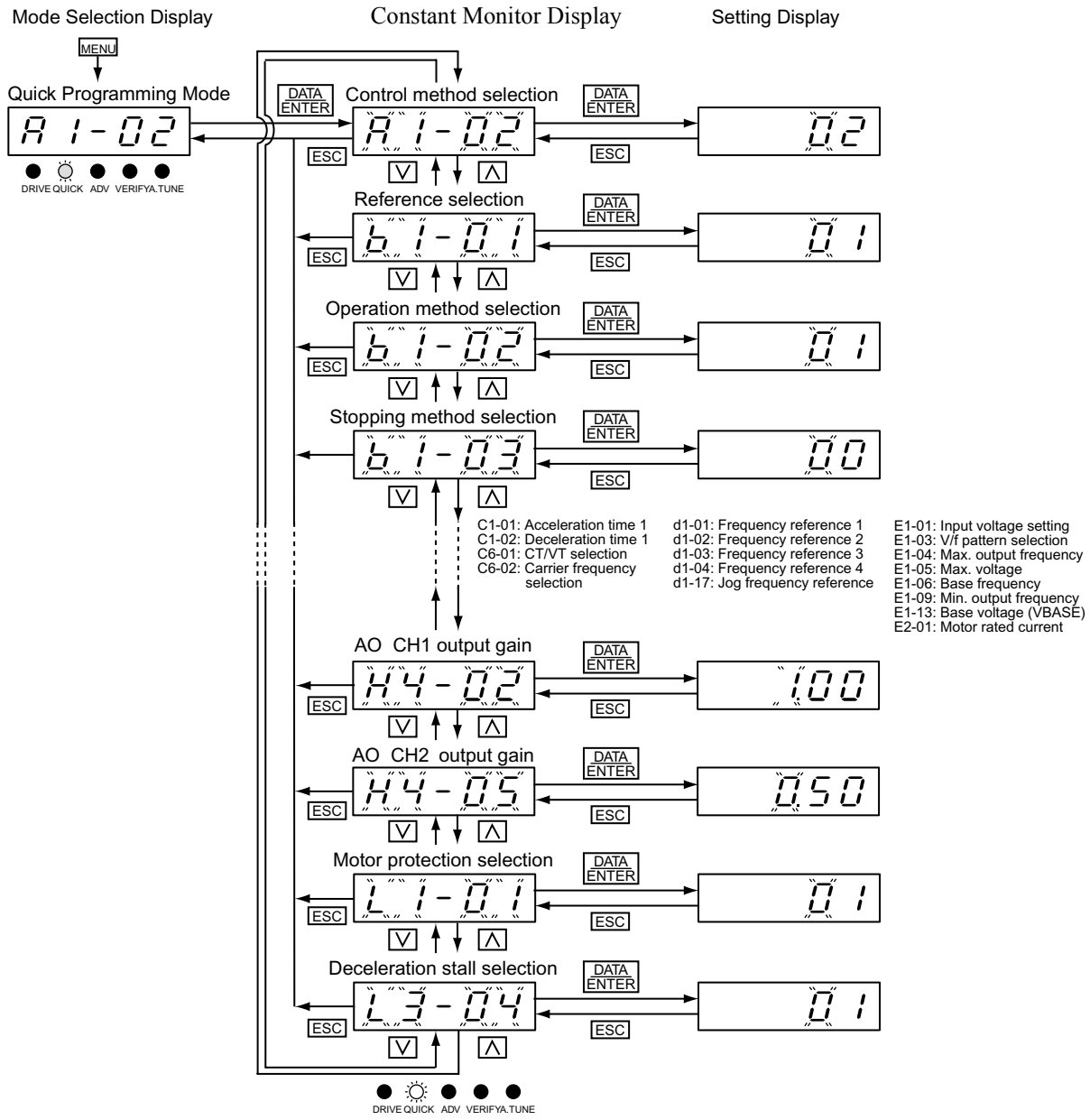

Fig 3.5 Operations in Quick Programming Mode

◆ Advanced Programming Mode

In advanced programming mode, all Inverter constants can be monitored and set.

Constants can be changed from the setting displays. Use the Increment, Decrement, and Shift/RESET Keys to change the frequency. When the DATA/ENTER Key is pressed after changing the setting, the user constant will be written into memory and the display will return to constant monitor automatically. Refer to *Chapter 5 User Constants* for details on the constants.

■Example Operations

Key operations in advanced programming mode are shown in the following figure.

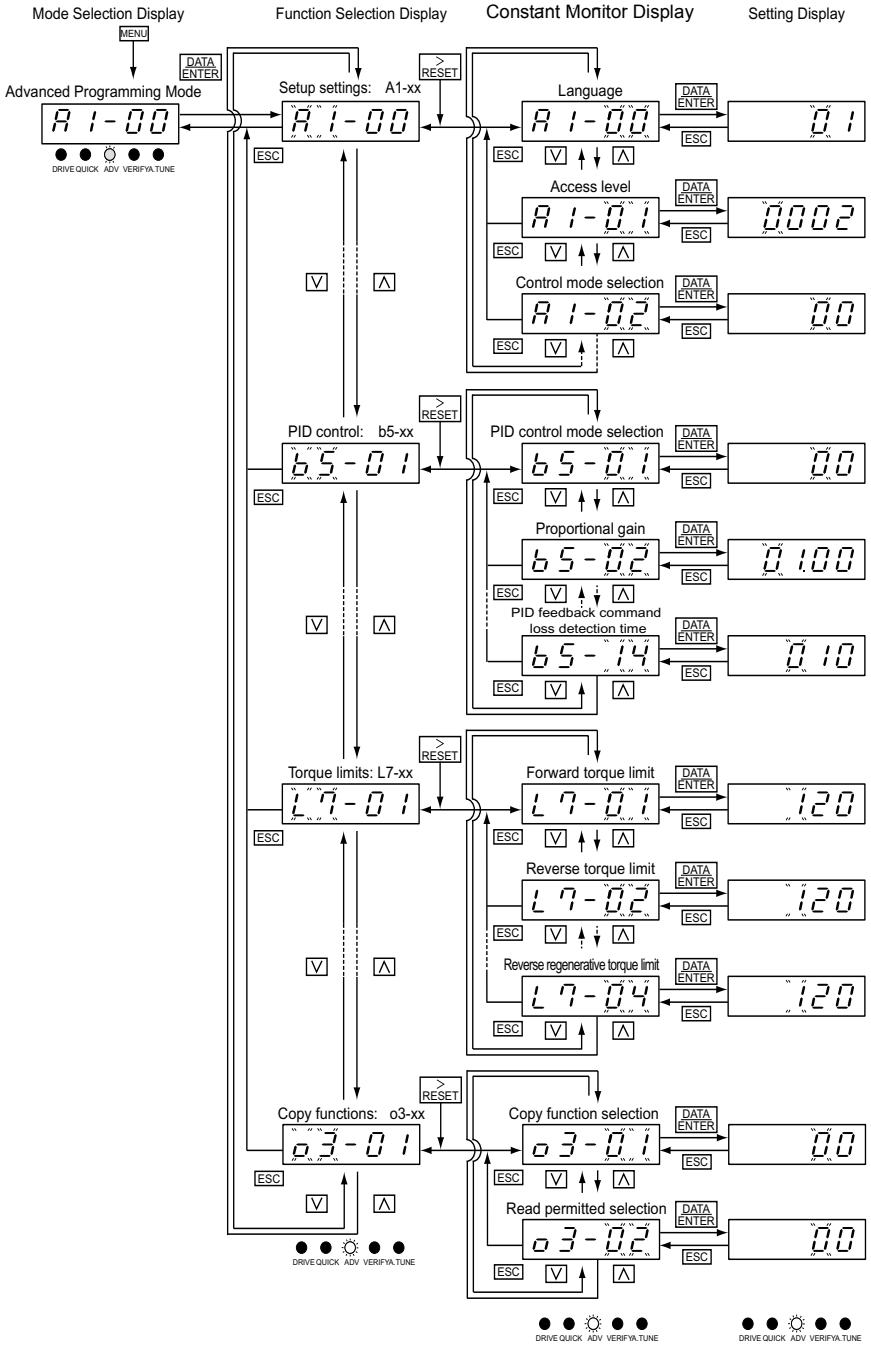

Fig 3.6 Operations in Advanced Programming Mode

■Setting User Constants

Here, the procedure is shown to change C1-01 (Acceleration Time 1) from 10 s to 20 s.

Table 3.3 Setting User Constants in Advanced Programming Mode

Step No.	Digital Operator Display	Description
1	F 0.00 DRIVE QUICK ADV VERIFY A.TUNE	Power supply turned ON.
2	F 0.00 DRIVE QUICK ADV VERIFY A.TUNE	MENU Key pressed to enter drive mode.
3	A1-02 DRIVE QUICK ADV VERIFY A.TUNE	MENU Key pressed to enter quick programming mode.
4	A1-00 DRIVE QUICK ADV VERIFY A.TUNE	MENU Key pressed to enter advanced programming mode.
5	A1-00 DRIVE QUICK ADV VERIFY A.TUNE	DATA/ENTER pressed to access monitor display.
6	C1-01 DRIVE QUICK ADV VERIFY A.TUNE	Increment or Decrement Key pressed to display C1-01 (Acceleration Time 1).
7	0 10.00 DRIVE QUICK ADV VERIFY A.TUNE	DATA/ENTER Key pressed to access setting display. The setting of C1-01 (10.00) is displayed.
8	0 10.00 DRIVE QUICK ADV VERIFY A.TUNE	Shift/RESET Key pressed to move the flashing digit to the right.
9	0 20.00 DRIVE QUICK ADV VERIFY A.TUNE	Increment Key pressed to change set value to 20.00 s.
10	End → 020.00	DATA/ENTER Key pressed to enter the set data. “END” is displayed for 10 s and then the entered value is displayed for 0.5 s.

Step No.	Digital Operator Display	Description
11	C1-01 DRIVE QUICK ADV VERIFY A.TUNE	Returns to the monitor display for C1-01 automatically.

◆ Verify Mode

Verify mode is used to display any constants that have been changed from their default settings in a programming mode or by auto tuning. “None” will be displayed if no settings have been changed.

Of the environment mode settings, only A1-02 will be displayed if it has been changed. Other environment modes settings will not be displayed even if they have been changed from their default settings.

Even in verify mode, the same procedures can be used to change settings as are used in the programming modes. Use the Increment, Decrement, and Shift/RESET Keys to change the constants. When the DATA/ENTER key is pressed after changing the setting, the user constant will be written into memory and the display will return to constant monitor automatically.

■Example Operations

An example of key operations is given below for when the following settings have been changed from their default settings: b1-01 (Reference Selection), C1-01 (Acceleration Time 1), E1-01 (Input Voltage Setting), and E2-01 (Motor Rated Current).

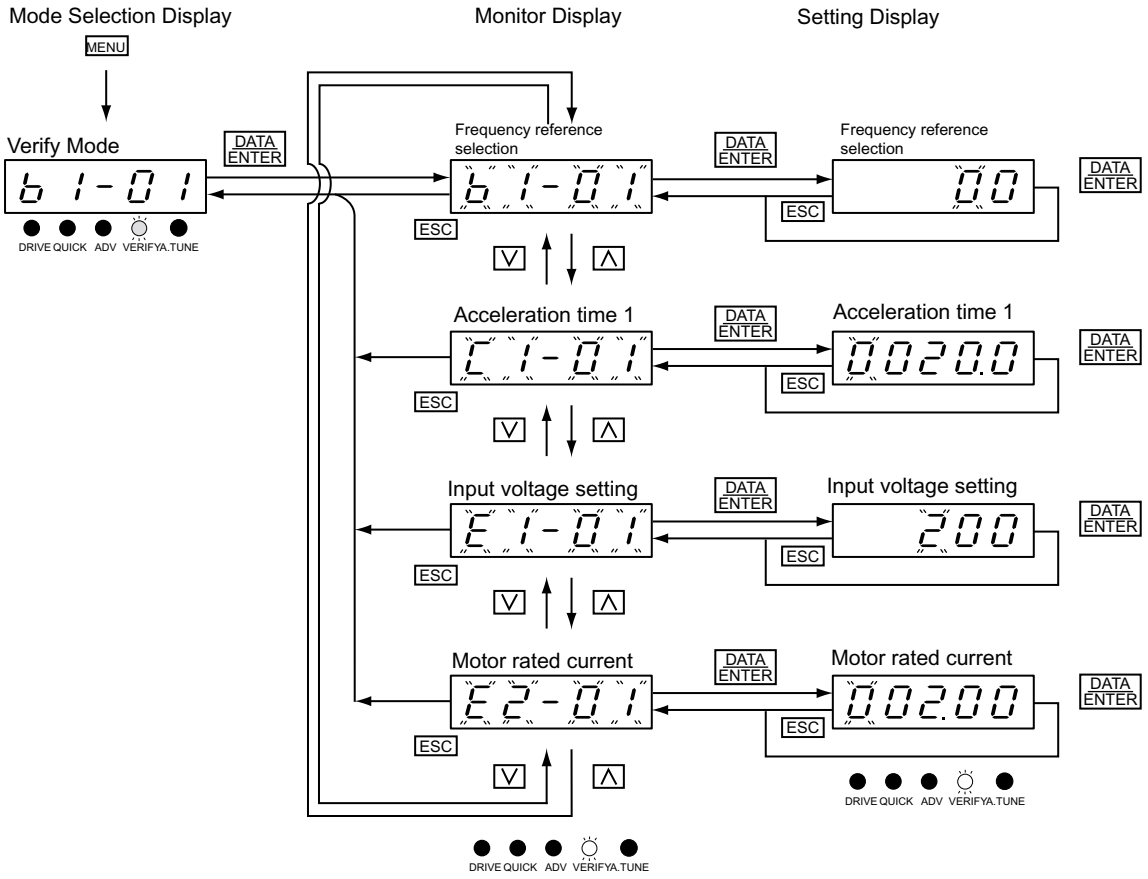

Fig 3.7 Operations in Verify Mode

◆ Auto tuning Mode

Auto tuning automatically tunes and sets the required motor constants when operating in the open-loop or flux vector control modes. Always perform auto tuning before starting operation.

When V/f control has been selected, stationary auto tuning for only line-to-line resistance can be selected.

When the motor cannot be disconnected from the load, perform stationary auto tuning. To set motor constants by calculation, contact your Yaskawa representatives.

The Inverter's auto tuning function automatically determines the motor constants, while a servo system's auto tuning function determines the size of a load, so these auto tuning functions are fundamentally different.

■Example of Operation

Set the motor output power (in kW), rated voltage, rated current, rated frequency, rated speed, and number of poles specified on the nameplate on the motor and then press the RUN Key. The motor is automatically run and the motor constants measured based on these settings and auto tuning will be set.

Always set all of the above items. Auto tuning cannot be started otherwise, e.g., it cannot be started from the motor rated voltage display.

Constants can be changed from the setting displays. Use the Increment, Decrement, and Shift/RESET Keys to change the constants. When the DATA/ENTER key is pressed after changing the setting, the user constant will be written into memory and the display will return to constant monitor automatically.

The following example shows auto tuning for open-loop vector control while operating the motor without switching to motor 2.

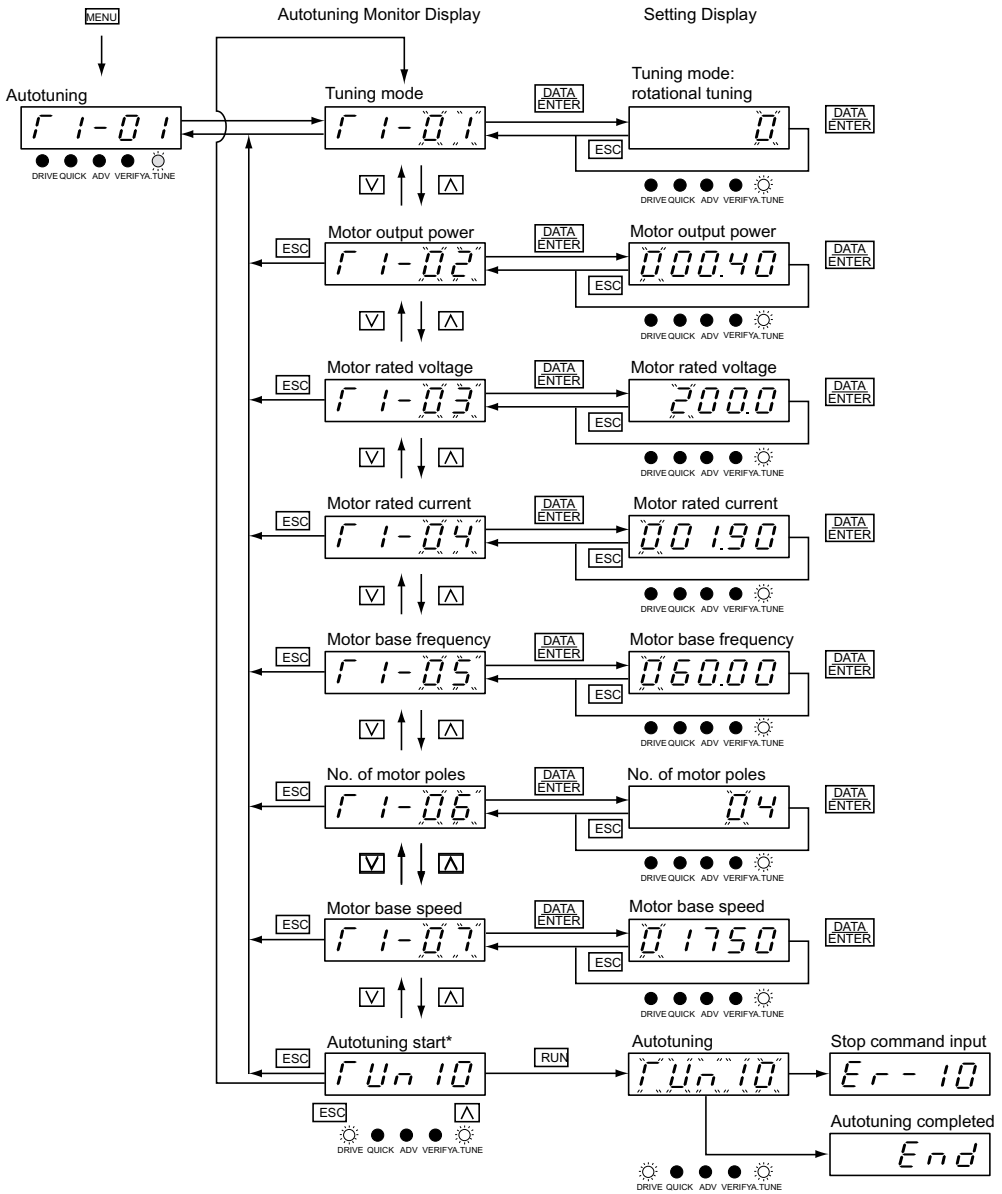

* TUn10 will be displayed during rotational auto tuning and TUn11 will be displayed during stationary auto tuning. The DRIVE indicator will light when auto tuning starts.

Fig 3.8 Operation in Auto tuning Mode

IMPORTANT

If a fault occurs during auto tuning, refer to *Chapter 7 Troubleshooting*.

4

Test Run

This chapter describes the procedures for test run of the Inverter and provides an example of trial operation.

Test Run Procedure

Perform test run according to the following flowchart. When setting the basic user constants, always set C6-01 (CT/VT Selection) according to the application.

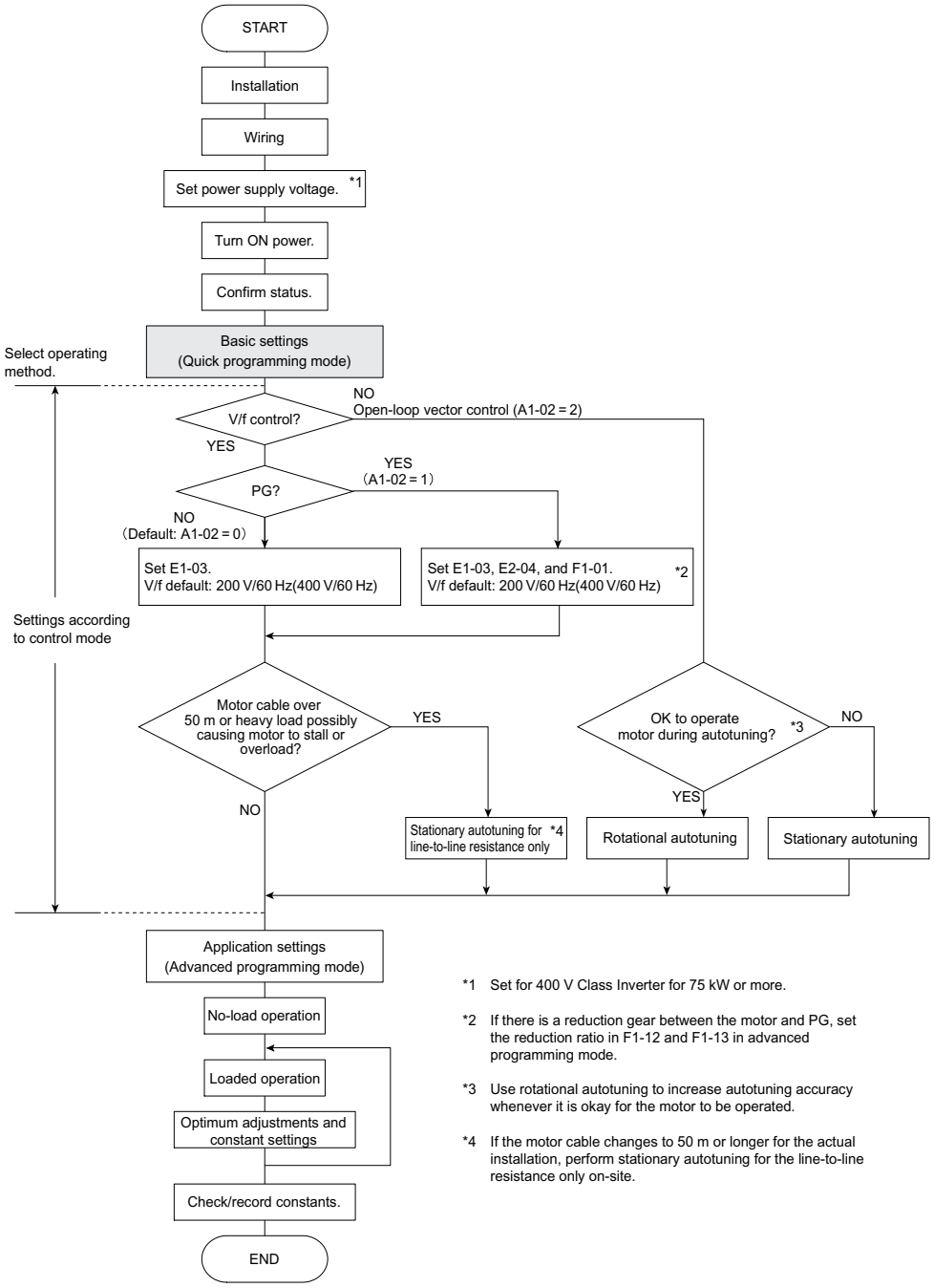

Fig 4.1 Test Run Flowchart

Test Run Operation

The operation for the test run is described in order in this section.

◆ Application Confirmation

First, confirm the application before using the Inverter.

- Fan, blower, pump
- Other equipment

For any Inverter application other than a fan, blower, or pump, set C6-01 (CT/VT Selection) to 0 (CT: low carrier, constant torque). The default setting is 1 (VT: high carrier, variable torque).

◆ Setting the Power Supply Voltage Jumper (400 V Class Inverters of 75 kW or Higher)

Set the power supply voltage jumper after setting E1-01 (Input Voltage Setting) for 400 V Class Inverters of 75 kW or higher. Insert the jumper into the voltage connector nearest to the actual power supply voltage.

The jumper is factory-set to 440 V when shipped. If the power supply voltage is not 440 V, use the following procedure to change the setting.

1. Turn OFF the power supply and wait for at least 5 minutes.
2. Confirm that the CHARGE indicator has gone out.
3. Remove the terminal cover.
4. Insert the jumper at the position for the voltage supplied to the Inverter (see *Fig 4.2*).
5. Return the terminal cover to its original position.

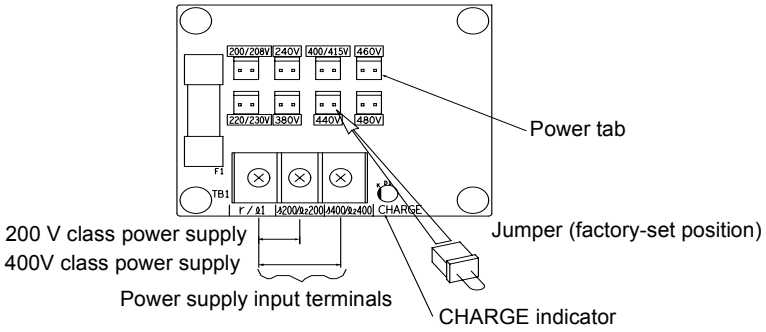

Fig 4.2 Large-capacity Inverter Connections

◆ Power ON

Confirm all of the following items and then turn ON the power supply.

- Check that the power supply is of the correct voltage.
  200 V class: 3-phase 200 to 240 VDC, 50/60 Hz
  400 V class: 3-phase 380 to 480 VDC, 50/60 Hz
- Make sure that the motor output terminals (U, V, W) and the motor are connected correctly.
- Make sure that the Inverter control circuit terminal and the control device are wired correctly.
- Set all Inverter control circuit terminals to OFF.
- When using a PG Speed Control Card, make sure that it is wired correctly.
- Make sure that the motor is not connected to the mechanical system (no-load status)
- Make sure the option cards are connected properly, if applicable.

◆ Checking the Display Status

If the Digital Operator's display at the time the power is connected is normal, it will read as follows:

Display for normal operation

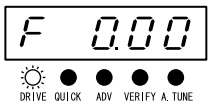

The frequency reference monitor is displayed in the data display section.

When an fault has occurred, the details of the fault will be displayed instead of the above display. In that case, refer to *Chapter 7 Troubleshooting*. The following display is an example of a display for faulty operation.

Display for fault operation

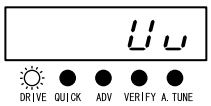

The display will differ depending on the type of fault.
A low voltage alarm is shown at left.

◆ Basic Settings

Switch to the quick programming mode (the QUICK indicator on the Digital Operation should be lit) and then set the following user constants.

Refer to *Chapter 3 Digital Operator and Modes* for Digital Operator operating procedures and to *Chapter 5 User Constants* and *Chapter 6 Constant Settings by Function* for details on the user constants.

Table 4.1 Basic Constant Settings

u: Must be set. w: Set as required.

Class	Constant Number	Name	Description	Setting Range	Factory Setting	Page
u	A1-02	Control method selection	Set the control method for the Inverter. 0: V/f control 1: V/f control with PG 2: Open-loop vector control	0 to 2	0	5-8
u	b1-01	Reference selection	Set the frequency reference input method. 0: Digital Operator 1: Control circuit terminal (analog input) 2: MEMOBUS communications 3: Option Card 4: Pulse train input	0 to 4	1	5-11 6-6 6-66 6-84
u	b1-02	Operation method selection	Set the run command input method. 0: Digital Operator 1: Control circuit terminal (sequence input) 2: MEMOBUS communications 3: Option Card	0 to 3	1	5-11 6-12 6-66 6-84
w	b1-03	Stopping method selection	Select stopping method when stop command is sent. 0: Deceleration to stop 1: Coast to stop 2: DC braking stop 3: Coast to stop with timer	0 to 3	0	5-11 6-15
u	C1-01	Acceleration time 1	Set the acceleration time in seconds for the output frequency to climb from 0% to 100%.	0.0 to 6000.0	10.0 s	5-18 6-20
u	C1-02	Deceleration time 1	Set the deceleration time in seconds for the output frequency to fall from 100% to 0%.	0.0 to 6000.0	10.0 s	5-18 6-20
u	C6-01	CT/VT selection	Set to CT (not low noise, maximum current/overload: 150%) or VT (low noise, maximum current/overload:120%). 0: CT 1: VT	0 or 1	1	5-23 6-2

Table 4.1 Basic Constant Settings (Continued)

u: Must be set. w: Set as required.

Class	Constant Number	Name	Description	Setting Range	Factory Setting	Page
w	C6-02	Carrier frequency selection	The carrier frequency is set low if the motor cable is 50 m or longer or to reduce radio noise or leakage current. The factory setting and setting range depends on the setting of C6-01.	0 to F	Depends on setting of C6-01.	5-23
w	d1-01 to d1-04 and d1-17	Frequency references 1 to 4 and jog frequency reference	Set the required speed references for multi-step speed operation or jogging.	0 to 400.00 Hz	d1-01 to d1-04: 0.00 Hz d1-17: 6.00 Hz	5-24 5-25 6-9
u	E1-01	Input voltage setting	Set the Inverter's nominal input voltage in volts.	155 to 255 V (200 V class) 310 to 510 V (400 V class)	200 V (200 V class) 400 V (400 V class)	5-28 6-110
u	E2-01	Motor rated current	Set the motor rated current.	10% to 200% of Inverter's rated current	Setting for general-purpose motor of same capacity as Inverter	5-29 6-50 6-108
w	H4-02 and H4-05	FM and AM terminal output gain	Adjust when an instrument is connected to the FM or AM terminal.	0.00 to 2.50	H4-02: 1.00 H4-05: 0.50	5-44
u	L1-01	Motor protection selection	Set to enable or disable the motor overload protection function using the electronic thermal relay. 0: Disabled 1: General motor protection 2: Inverter motor protection 3: Vector motor protection	0 to 3	1	5-48 6-50
w	L3-04	Stall prevention selection during deceleration	If using the dynamic brake option (braking resistor, Braking Resistor Units, and Braking Units), be sure to set constant L3-04 to 0 (disabled) or 3 (enabled with braking resistor).	0 to 3	1	5-50 6-27

IMPORTANT

When C6-01 is set to 0 (CT), non-low noise will apply and the Inverter overload withstand ratio will be 150% of the Inverter rating per minute. When C6-01 is set to 1 (VT), low noise will apply and the Inverter overload withstand ratio will be 120% of the Inverter rating per minute. If C6-01 is set to 1 (VT) when overload withstand capability is required by the application, the life of the Inverter may be reduced.

If the wires between the inverter and the motor are long, the high frequency leakage current from the cable will increase, which will cause the inverter output current to increase and may affect the peripheral units adversely.

In such a case, adjust the carrier frequency according to Table 4.2 for detailed information, refer to Chapter 5 “User Constant List”.

Table 4.2 Wiring Distance Between Inverter and Motor

Wiring Distance between Inverter and Motor	Less than 50m	Less than 100M	Over 100m
Carrier Frequency	15 kHz or less	10 kHz or less	5 kHz or less
C6-02 Setting	0 ~ 6	0 ~ 4	0 ~ 2

Note: The setting range at C6-02 depends on C6-01 setting. Reducing the carrier frequency setting is also effective for reducing radio noise.

◆ Settings for the Control Methods

Auto tuning methods depend on the control method set for the Inverter. Make the settings required by the control method.

■Overview of Settings

Make the required settings in quick programming mode and auto tuning mode according to the following flow-chart.

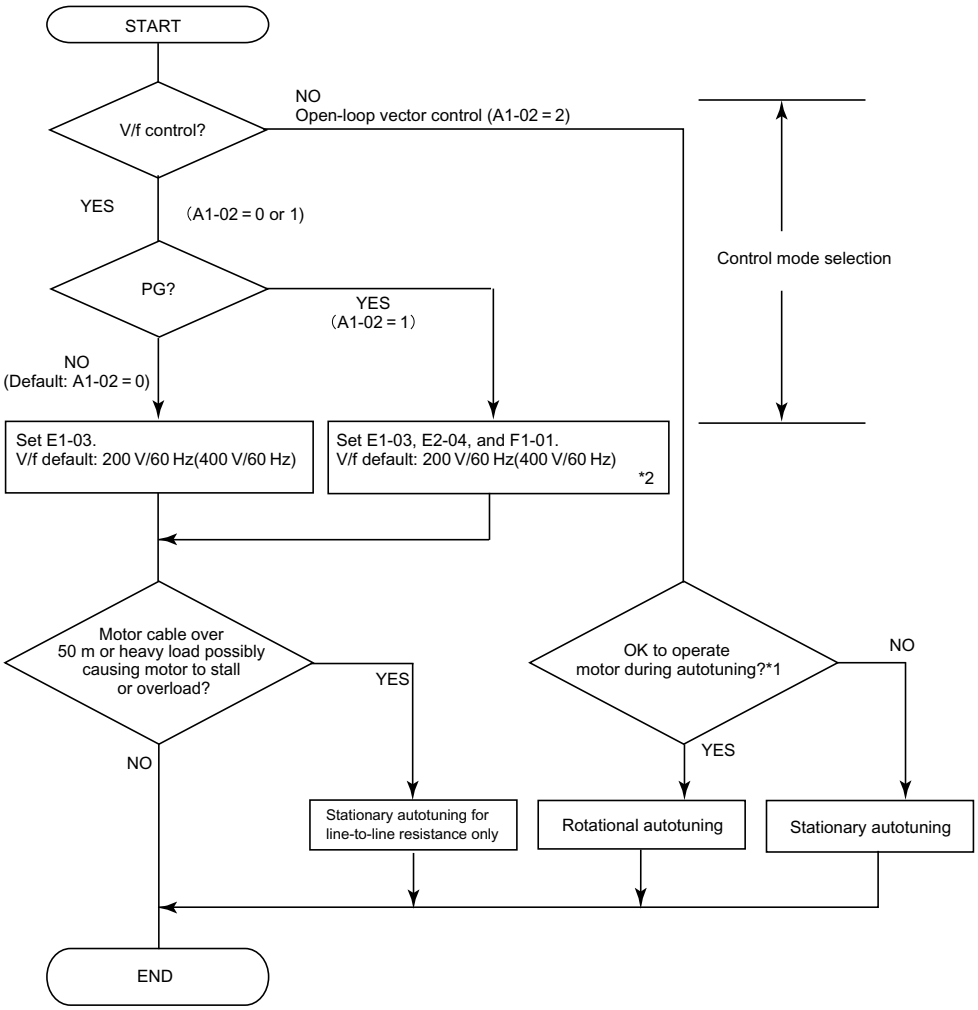

Note If the motor cable length significantly changes (50 m or more) for the actual installation, perform stationary auto tuning for the line-to-line resistance on-site.

* 1. Use rotational auto tuning to increase auto tuning accuracy whenever it is okay for the motor to be operated.

* 2. If there is a reduction gear between the motor and PG, set the reduction ratio in F1-12 and F1-13 from the advanced programming mode.

Fig 4.3 Settings According to the Control Method

■Setting the Control Method

One of the following three control methods can be selected.

- V/f control without PG (normal variable control)
- V/f control with PG (simple speed feedback control)
- Open-loop vector control (high-performance control without PG)

V/f Control without PG (A1-02 = 0)

- Either set one of the fixed V/f patterns (0 to E) in E1-03 (V/f Pattern Selection), or set F in E1-03 to specify a user-set pattern then set a custom V/f pattern to E1-04 through E1-13 from the advanced programming mode as required.

Simple operation of a general-purpose motor at 50 Hz:	E1-03 = 0
Simple operation of a general-purpose motor at 60 Hz:	E1-03 = F (default) or 1 If E1-03 = F, the default setting in the user setting from E1-04 to E1-13 are for 60 Hz

- Perform stationary auto tuning for the line-to-line resistance only if the motor cable is 50 m or longer or the load is heavy enough to cause stalling. Refer to the following section on *Auto tuning* for details on stationary auto tuning.

V/f Control with PG (A1-02=1)

- Either set one of the fixed V/f patterns (0 to E) in E1-03 (V/f Pattern Selection) or set F in E1-03 to specify a user-set pattern then set a custom V/f pattern to E1-04 through E1-13 from the advanced programming mode as required.

Simple operation of a general-purpose motor at 50 Hz:	E1-03 = 0
Simple operation of a general-purpose motor at 60 Hz:	E1-03 = F (default) or 1 If E1-03 = F, the default setting in the user setting from E1-04 to E1-13 are for 60 Hz

- Set the number of motor poles in E2-04 (Number of Motor Poles)
- Set the number of rotations per pulse in F1-01 (PG Constant). If there is a reduction gear between the motor and PG, set the reduction ratio in F1-12 and F1-13 in advanced programming mode.
- Perform stationary auto tuning for the line-to-line resistance only if the motor cable is 50 m or longer or the load is heavy enough to cause stalling. Refer to the following section on *Auto tuning* for details on stationary auto tuning.

Open-loop Vector Control (A1-02 = 2)

Perform auto tuning. If the motor can be operated, perform rotational auto tuning. If the motor cannot be operated, perform stationary auto tuning. Refer to the following section on *Auto tuning* for details on auto tuning.

◆ Auto tuning

Use the following procedure to perform auto tuning to automatically set motor constants when using the open-loop vector control method, when the cable length is long, etc.

■ Setting the Auto tuning Mode

One of the following three auto tuning modes can be selected.

- Rotational auto tuning
- Stationary auto tuning
- Stationary auto tuning for line-to-line resistance only

Rotational Auto tuning (T1-01 = 0)

Rotational auto tuning is used only for open loop-vector control. Set T1-01 to 0, input the data from the nameplate, and then press the RUN Key on the Digital Operator to start the auto tuning. The Inverter will automatically set the reguired motor constants after running/stopping the motor for 1 ~ 2 minutes.

IMPORTANT

1. Always disconnect the motor from the machine and confirm that it is safe to operate the motor before performing rotational tightening.
2. If the motor cannot be operated by itself, perform stationary auto tuning, but always use rotational auto tuning whenever it is possible to increase performance.

Stationary Auto tuning (T1-01 = 1)

Stationary auto tuning is used only for open-vector control. Set T1-01 to 1, input the data from the nameplate, and then press the RUN Key on the Digital Operator to start the auto tuning. The Inverter will supply power to the stationary motor for approximately 1 minute and some of the required motor constants will be set automatically. The remaining motor constants will be set automatically at the first operation of motor above 30Hz for 3 seconds in drive mode.

IMPORTANT

1. Power will be supplied to the motor when stationary auto tuning is performed even though the motor will not turn. Do not touch the motor until auto tuning has been completed.
2. When performing stationary auto tuning connected to a conveyor or other machine, ensure that the holding brake is not activated during auto tuning.
3. Keep the motor load ratio to 30% or less the first time the system is operated in drive mode after performing stationary auto tuning.

Stationary Auto tuning for Line-to-Line Resistance Only (T1-01 = 2)

Stationary auto tuning for line-to-line resistance only can be used in any control method. This is the only auto tuning possible for V/f control and V/f control with PG modes.

Auto tuning can be used to improve control errors when the motor cable is long or the cable length has changed or when the motor and Inverter have different capacities.

To perform auto tuning in V/f control or V/f control with PG, set T1-01 to 2 for open-loop vector control, and then press the RUN Key on the Digital Operator. The Inverter will supply power to the stationary motor for approximately 20 seconds and the Motor Line-to-Line Resistance (E2-05) and cable resistance will be automatically measured.

IMPORTANT

1. Power will be supplied to the motor when stationary auto tuning for line-to-line resistance is performed even though the motor will not turn. Do not touch the motor until auto tuning has been completed.
2. When performing stationary auto tuning connected to a conveyor or other machine, ensure that the holding brake is not disengaged during auto tuning.

■ Constant Settings for Auto tuning

The following constants must be set before auto tuning.

Table 4.3 Constant Settings before Auto tuning

Constant Number	Name	Display	Setting Range	Factory Setting	Data Displays during Auto tuning		
					V/f	V/f with PG	Open Loop Vector
T1-00	Motor 1/2 selection	Set the location where the auto tuned motor constants are to be stored. 1: E1 to E2 (motor 1) 2: E3 to E4 (motor 2)	1 or 2	1	Yes	Yes	Yes
T1-01	Auto tuning mode selection	Set the auto tuning mode. 0: Rotational autotuning 1: Stationary autotuning 2: Stationary autotuning for line-to-line resistance only	0 to 2	2 (V/f and V/f with PG) 0 (open-loop vector)*2	Yes (only for 2)	Yes (only for 2)	Yes
T1-02	Motor output power	Set the output power of the motor in kilowatts.*3	10% to 200% of Inverter rated output *5	Same as Inverter rated output	Yes	Yes	Yes
T1-03	Motor rated voltage	Set the rated voltage of the motor in volts.*3 *4	0 to 255.0 V (200 V class) 0 to 510.0 V (400 V class)	200.0 V (200 V class) 400.0 V (400 V class)	-	-	Yes
T1-04	Motor rated current	Set the rated current of the motor in amps.*3	10% to 200% of Inverter rated current*5	Same as general-purpose motor with same capacity as Inverter	Yes	Yes	Yes
T1-05	Motor base frequency	Set the base frequency of the motor in hertz.*3 *4	0 to 400.0 Hz *6	60.0 Hz	-	-	Yes
T1-06	Number of motor poles	Set the number of motor poles.	2 to 48 poles	4 poles	-	-	Yes
T1-07	Motor base speed	Set the base speed of the motor in r/min.*3	0 to 24000 *6	1750 r/min	-	-	Yes

* 1. Not normally displayed. Displayed only when a motor switch command is set for a multi-function digital input (one of H1-01 to H1-05 set to 16).
* 2. Only a setting of 2 (stationary auto tuning for line-to-line resistance only) is possible for V/f control or V/f control with PG.
* 3. For a constant-output motor, set the value at the base speed.
* 4. For an inverter motor or vector motor, the voltage and frequency may be lower than for a general-purpose motor. Always confirm setting on the nameplate or in test reports. Also, if you know the no-load values, set the no-load voltage in T1-03 and the no-load frequency in T1-05 to obtain better accuracy.
* 5. Stable vector control will be possible when the setting is between 50% and 100%.
* 6. The setting range depends on the Inverter capacity and the setting of C6-01 (CT/VT Selection).

■Digital Operator Displays during Auto tuning

The following displays will appear on the Digital Operator during auto tuning.

Table 4.4 Digital Operator Displays during Auto tuning

Digital Operator Display	Description
Auto tuning mode selection: T1-01 T1-01 DRIVE QUICK ADV VERIFY A.TUNE	Using the same procedures as for the programming modes check and set the T1 constants according to information on the previous page. Be sure that T1-01 (Auto tuning Mode Selection) is set correctly and check safety around the motor and machine.
Motor base speed: T1-07 (For rotational auto tuning) T1-07 DRIVE QUICK ADV VERIFY A.TUNE	The auto tuning start display will appear when all settings through T1-07 have been completed. The A.TUNE and DRIVE indicators will be lit.
Auto tuning started: TUn10 TUn10 DRIVE QUICK ADV VERIFY A.TUNE	Auto tuning will start when the RUN Key is pressed from the auto tuning start display. The digit second from the right in TUn□□ is the Motor 1/2 Selection (T1-00) and the right digit is the Auto tuning Mode Selection (T1-01).
Auto tuning TUn10 DRIVE QUICK ADV VERIFY A.TUNE Stop command input Er-03 DRIVE QUICK ADV VERIFY A.TUNE	If the STOP Key is pressed or a measurement error occurs during auto tuning, and error message will be display and auto tuning will be stopped. Refer to *Errors during Auto tuning* on page 7-13.
Auto tuning completed End DRIVE QUICK ADV VERIFY A.TUNE	END will be displayed after approximately 1 to 2 minutes, indicating that auto tuning has been completed.

◆ Application Settings

User constants are set as required in advanced programming mode (i.e., with the ADV indicator lit on the Digital Operator). All the constants that can be set in quick programming mode can also be displayed and set in advanced programming mode.

■Setting Examples

The following are examples of settings for applications.

- When using an Inverter-mounted braking resistor (ERF), set L8-01 to 1 to enable ERF braking resistor overheating protection.
- To prevent the machine from being operated in reverse, set b1-04 to 1 to disable reverse operation.
- To increase the speed of a 60 Hz motor by 10%, set E1-04 to 66.0 Hz.
- To use a 0 to 10-V analog signal for a 60 Hz motor for variable-speed operation between 0 and 54 Hz (0% to 90% speed deduction), set H3-02 to 90.0%.
- To control speed between 20% and 80% to ensure smooth gear operation and limit the maximum speed of the machine, set d2-01 to 80.0% and set d2-02 to 20.0%.

◆ No-load Operation

While being no-load operation (without connecting the machine and the motor), press the LOCAL/REMOTE Key on the Digital Operator to change to LOCAL mode (the SEQ and REF indicators on the Digital Operator should be OFF).

After confirming safety around the motor and machine, start the Inverter operation from the Digital Operator. Confirm that the motor works normally and that no errors are displayed at the Inverter.

Jog Frequency Reference (d1-17, default: 6.00 Hz) can be started and stopped by pressing and releasing the JOG Key on the Digital Operator. If the external sequence prevent operation from the Digital Operator, confirm that emergency stop circuits and machine safety mechanisms are functioning, and then start operation in REMOTE mode (i.e., with a signal from the control signal terminals). The safety precautions must always be taken before starting the Inverter with the motor connected to the machine.

INFO

Both a RUN command (forward or reverse) and a frequency reference (or multi-step speed command) must be provided to start Inverter operation.
Input these commands and reference regardless of the operation method (i.e., LOCAL of REMOTE).

◆ Loaded Operation

Connect the machine to the motor and then start operation as described for no-load operation (i.e., from the Digital Operator or by using control circuit terminal signals).

■Connecting the Load

- After confirming that the motor has stopped completely, connect the mechanical system.
- Be sure to tighten all the screws when securing the motor shaft to the mechanical system.

■Operation using the Digital Operator

- Use the Digital Operator to start operation in LOCAL mode in the same way as in no-load operation.
- In case a fault occurs during operation, make sure the STOP Key on the Digital Operator is easily accessible.
- At first, set the frequency reference to a low speed of about one tenth the normal operating speed.

■ Checking Operating Status

- Having checked that the operating direction is correct and that the machine is operating smoothly at slow speed, increase the frequency reference.
- By changing the frequency reference or the rotation direction, check that there is no oscillation or abnormal sound from the motor. Check the monitor display to ensure that U1-03 (Output Current) is not too high.
- Refer to *Adjustment Suggestions* on page 4-17 if hunting, vibration, or other problems originating in the control system occur.

◆ Check and Recording User Constants

Use verify mode (i.e., when the VERIFY indicator on the Digital Operator is lit) to check user constants that have been changed for trial operation and record them in a user constant table.

Any user constants that have been changed by auto tuning will also be displayed in verify mode.

If required, the copy function (in constants o3-01 and o3-02 displayed in advanced programming mode) can be used to copy the changed settings from the Inverter to a recording area in the Digital Operator. If changed settings are saved in the Digital Operator, they can be easily copied back to the Inverter to speed up system recovery if for any reason the Inverter has to be replaced.

The following functions can also be used to manage user constants.

- Recording user constants
- Setting access levels for user constants
- Setting a password

■ Recording User Constants (o2-03)

If o2-03 is set to 1 after completing test run, the settings of user constants will be saved in a separate memory area in the Inverter. Later, after Inverter settings have been changed, the user constants can be initialized to the settings saved in the separate memory area when o2-03 was set to 1 by setting A1-03 (Initialize) to 1110.

■User Constant Access Levels (A1-01)

A1-01 can be set to 0 (monitoring-only) to prevent user constants from being changed. A1-01 can also be set to 1 (User-specified Constants) and used along with A2 constants to display only constants required by the machine or application in a programming mode.

■Password (A1-04 and A1-05)

When the access level is set to monitoring-only (A1-01 = 0), a password can be set so that user constants will be displayed only when the correct password is input.

Adjustment Suggestions

If hunting, vibration, or other problems originating in the control system occur during test run, adjust the constants listed in the following table according to the control method. This table lists only the most commonly used user constants.

Table 4.5 Adjusted User Constants

Control Method	Name (Constant Number)	Performance	Factory Setting	Recom-mended Setting	Adjustment Method
V/f control (A1-02 = 0 or 1)	Hunting-prevention gain (N1-02)	Controlling hunting and vibration in middle-range speeds (10 to 40 Hz)	1.00	0.50 to 2.00	• Reduce the setting if torque is insufficient for heavy loads. • Increase the setting if hunting or vibration occurs for light loads.
	Carrier frequency selection (C6-02)	• Reducing motor magnetic noise • Controlling hunting and vibration at low speeds	Depends on capacity	0 to default	• Increase the setting if motor magnetic noise is high. • Reduce the setting if hunting or vibration occurs at low to middle-range speeds.
	Torque compensation primary delay time constant (C4-02)	• Improving torque and speed response • Controlling hunting and vibration	Depends on capacity	200 to 1000 ms	• Reduce the setting if torque or speed response is slow. • Increase the setting if hunting or vibration occurs.
	Torque compensation gain (C4-01)	• Improving torque at low speeds (10 Hz or lower) • Controlling hunting and vibration	1.00	0.50 to 1.50	• Increase the setting if torque is insufficient at low speeds. • Reduce the setting if hunting or vibration occurs for light loads.
	Middle output frequency voltage (E1-08) Minimum output frequency voltage (E1-10)	• Improving torque at low speeds • Controlling shock at startup	Depends on capacity and voltage	Default to Default + 3 to 5 V*	• Increase the setting if torque is insufficient at low speeds. • Reduce the setting if shock at startup is large.

Table 4.5 Adjusted User Constants (Continued)

Control Method	Name (Constant Number)	Performance	Factory Setting	Recom-mended Setting	Adjustment Method
Open-loop vector control (A1-02 = 2)	Speed feedback detection control (AFR) gain (N2-01)	• Improving torque and speed response • Controlling hunting and vibration in middle-range speeds (10 to 40 Hz)	1.00	0.50 to 2.00	• Reduce the setting if torque or speed response is slow. • Increase the setting if hunting or vibration occurs.
	Torque compensation primary delay time constant (C4-02)	• Improving torque and speed response • Controlling hunting and vibration	20 ms	20 to 100 ms	• Reduce the setting if torque or speed response is slow. • Increase the setting if hunting or vibration occurs.
	Slip compensation primary delay time (C3-02)	• Improving speed response • Improving speed stability	200 ms	100 to 500 ms	• Reduce the setting if speed response is slow. • Increase the setting if the speed is not stable.
	Slip compensation gain (C3-01)	• Improving speed accuracy	1.0	0.5 to 1.5	• Increase the setting if speed is slow. • Reduce the setting if the speed is too fast.
Open-loop vector control (A1-02 = 2)	Carrier frequency selection (C6-02)	• Reducing motor magnetic noise • Controlling hunting and vibration at low speeds (10 Hz or less)	Depends on capacity	0 to default	• Increase the setting if motor magnetic noise is high. • Reduce the setting if hunting or vibration occurs at low speeds.
	Middle output frequency voltage (E1-08) Minimum output frequency voltage (E1-10)	• Improving torque at low speeds • Controlling shock at startup	Depends on capacity and voltage	Default to Default + 3 to 5 V*	• Increase the setting if torque or speed response is slow. • Reduce the setting if shock at startup is large.

* The setting is given for 200 V Class Inverters. Double the voltage for 400 V Class Inverters.

- Do not change the Torque Compensation Gain (C4-01) from its default setting of 1.00 when using open-loop vector control.
- If speeds are inaccurate during regeneration in open-loop vector control, enable Slip Compensation During Regeneration (C3-04 = 1).
- Use slip compensation to improve speed control during V/f control (A1-02 = 0).
  Set the Motor Rated Current (E2-01), Motor Rated Slip (E2-02), and Motor No-load Current (E2-03), and then adjust the Slip Compensation Gain (C3-01) to between 0.5 and 1.5. The default setting for V/f control is C3-01 = 0.0 (slip compensation disabled).
- To improve speed response and stability in V/f control with a PG (A1-02 = 1), set the ASR constants (C5-01 to C5-05) to between 0.5 and 1.5 times the default. (It is not normally necessary to adjust this setting.) ASR for V/f control with a PG will only control the output frequency; a high gain, such as is possible for open-loop vector control, cannot be set.

The following user constants will also indirectly affect the control system.

Table 4.6 Constants Indirectly Affecting Control and Applications

Name (Constant Number)	Application
CT/VT selection (C6-01)	Sets the maximum torque and overload capability to 120% or 150%.
DWELL function (b6-01 to b6-04)	Used for heavy loads or large machine backlashes.
Acceleration/deceleration times (C1-01 to C1-11)	Adjust torque during acceleration and deceleration.
S-curve characteristics (C2-01 to C2-04)	Used to prevent shock when starting and the completing acceleration and deceleration.
Jump frequencies (d3-01 to d3-04)	Used to avoid resonance points during operation.
Analog input filter time constant (H3-12)	Used to prevent fluctuations in analog input signals caused by noise.
Stall prevention (L3-01 to L3-06)	Used to prevent OV (over voltage errors) and motor stalling for heavy loads or rapid acceleration/deceleration. Stall prevention is enabled by default and the setting does not normally need to be changed. When using a braking resistor, however, disable stall prevention during deceleration by setting L3-04 to 0.
Torque limits (L7-01 to L7-04)	Set the maximum torque during vector control. If a setting is increased, use an inverter with higher capacity than the motor. If a setting is reduced, stalling can occur under heavy loads.

Notes:

5

User Constants

This chapter describes all user constants that can be set in the Inverter.

User Constant Descriptions

This section describes the contents of the user constant tables.

◆ Description of User Constant Tables

User constant tables are structured as shown below. Here, b1-01 (Frequency Reference Selection) is used as an example.

Constant Number	Name	Description	Setting Range	Factory Setting	Change during Operation	Control Methods			MEMOBUS Register	Page
						V/f	V/f with PG	Open Loop Vector		
b1-01	Reference selection	Set the frequency reference input method. 0: Digital Operator 1: Control circuit terminal (analog input) 2: MEMOBUS communications 3: Option Card 4: Pulse train input	0 to 4	1	No	Q	Q	Q	180H	-

- Constant Number: The number of the user constant.
- Name: The name of the user constant.
- Description: Details on the function or settings of the user constant.
- Setting Range: The setting range for the user constant.
- Factory Setting: The factory setting (each control method has its own factory setting. Therefore the factory setting changes when the control method is changed.)
  Refer to page 5-70 for factory settings by control method.
- Change during Operation: Indicates whether or not the constant can be changed while the Inverter is in operation.
  - Yes: Changes possible during operation.
  - No: Changes not possible during operation.
- Control Methods: Indicates the control methods in which the user constant can be monitored or set.
  - Q: Items which can be monitored and set in either quick programming mode or advanced programming mode.
  - A: Items which can be monitored and set only in advanced programming mode.
  - No: Items which cannot be monitored or set for the control method.
- MEMOBUS Register: The register number used for MEMOBUS communications.
- Page: Reference page for more detailed information on the constant.

Digital Operation Display Functions and Levels

The following figure shows the Digital Operator display hierarchy for the Inverter.

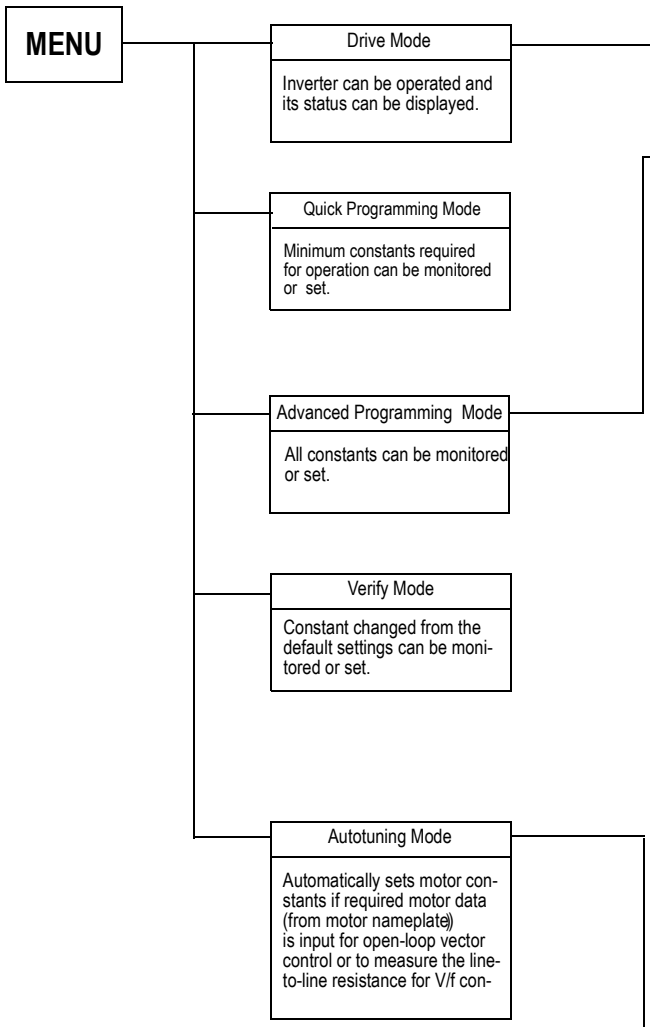

No.	Function	Page
U1	Status Monitor Constants	5-64
U2	Fault Trace	5-68
U3	Fault History	5-70
A1	Initialize Mode	5-8
A2	User-specified Setting Mode	5-10
b1	Operation Mode Selections	5-11
b2	DC Injection Braking	5-12
b3	Speed Search	5-13
b4	Timer Function	5-14
b5	PID Control	5-15
b6	Dwell Functions	5-16
b8	Energy Saving	5-17
C1	Acceleration/Deceleration	5-18
C2	S-curve Acceleration/Deceleration	5-19
C3	Motor Slip Compensation	5-20
C4	Torque Compensation	5-21
C5	Speed Control (ASR)	5-22
C6	Carrier Frequency	5-23
d1	Preset Reference	5-24
d2	Reference Limits	5-25
d3	Jump Frequencies	5-26
d4	Reference Frequency Hold	5-26
d6	Field Weakening	5-27
E1	V/f Pattern	5-28
E2	Motor Setup	5-29
E3	Motor 2 V/f Pattern	5-30
E4	Motor 2 Setup	5-31
F1	PG Option Setup	5-32
F4	Analog Monitor Cards	5-35
F5	Digital Output Card	5-36
F6	Communications Option Card	5-37
H1	Multi-function Contact Inputs	5-38
H2	Multi-function Contact Outputs	5-40
H3	Analog Inputs	5-42
H4	Multi-function Analog Outputs	5-44
H5	MEMOBUS Communications	5-45
H6	Pulse Train	5-46
L1	Motor Overload	5-47
L2	Power Loss Ridethrough	5-48
L3	Stall Prevention	5-50
L4	Reference Detection	5-52
L5	Fault Reset	5-53
L6	Torque Detection	5-54
L7	Torque Limits	5-55
L8	Hardware Protection	5-55
N1	Hunting Prevention Function	5-57
N2	Speed Feedback Protection Control	5-58
N3	High-slip Braking	5-58
o1	Monitor Select	5-59
o2	Multi-function Selections	5-61
o3	Copy Function	5-62
T	Motor Autotuning	5-63

◆ User Constants Settable in Quick Programming Mode

The minimum user constants required for Inverter operation can be monitored and set in quick programming mode. The user constants displayed in quick programming mode are listed in the following table. These, and all other user constants, are also displayed in advanced programming mode.

Refer to the overview of modes on page 3-4 for an overview of quick programming mode.

Constant Number	Name	Description	Setting Range	Factory Setting	Change during Operation	Control Methods			MEMOBUS Register
						V/f	V/f with PG	Open Loop Vector	
A1-02	Control method selection	Set the control method for the Inverter. 0: V/f control 1: V/f control with PG 2: Open-loop vector control	0 to 2	0	No	Q	Q	Q	102H
b1-01	Reference selection	Set the frequency reference input method. 0: Digital Operator 1: Control circuit terminal (analog input) 2: MEMOBUS communications 3: Option Card 4: Pulse train input	0 to 4	1	No	Q	Q	Q	180H
b1-02	Operation method selection	Set the run command input method 0: Digital Operator 1: Control circuit terminal (sequence input) 2: MEMOBUS communications 3: Option Card	0 to 3	1	No	Q	Q	Q	181H
b1-03	Stopping method selection	Select stopping method when stop command is sent. 0: Deceleration to stop 1: Coast to stop 2: DC braking stop (Stops faster than coast to stop, without regenerative operation.) 3: Coast to stop with timer (Run commands are disregarded during deceleration time.)	0 to 3	0	No	Q	Q	Q	182H
C1-01	Acceleration time 1	Set the acceleration time in seconds for the output frequency to climb from 0% to 100%.	0.0 to 6000.0 *1	10.0 s	Yes	Q	Q	Q	200H
C1-02	Deceleration time 1	Set the deceleration time in seconds for the output frequency to fall from 100% to 0%.			Yes	Q	Q	Q	201H
C6-01	CT/VT selection	0: CT (low carrier, constant torque, 150% per minute) 1: VT (high carrier, variable torque, 120% per minute)	0 or 1	1	No	Q	Q	Q	223H

Constant Number	Name	Description	Setting Range	Factory Setting	Change during Operation	Control Methods			MEMOBUS Register
						V/f	V/f with PG	Open Loop Vector	
C6-02	Carrier frequency selection	Select carrier wave fixed pattern. Select F to enable detailed settings using constants C6-03 to C6-07.	0 to F	6 *2	No	Q	Q	Q	224H
d1-01	Frequency reference 1	Set the frequency reference in the unit specified in o1-03 (Frequency Units for Reference Setting And Monitor, default: Hz)	0 to 400.00	0.00 Hz	Yes	Q	Q	Q	280H
d1-02	Frequency reference 2	Frequency reference when multi-step speed command 1 is ON for a multi-function input (unit: Set in o1-03).		0.00 Hz	Yes	Q	Q	Q	281H
d1-03	Frequency reference 3	Frequency reference when multi-step speed command 2 is ON for a multi-function input (unit: Set in o1-03).		0.00 Hz	Yes	Q	Q	Q	282H
d1-04	Frequency reference 4	Frequency reference when multi-step speed command 1 and 2 are ON for a multi-function input (unit: Set in o1-03).		0.00 Hz	Yes	Q	Q	Q	283H
d1-17	Jog frequency reference	Frequency reference when Jog Frequency Selection, FJOG command, or RJOG command is ON for a multi-function input (unit: Set in o1-03).		6.00 Hz	Yes	Q	Q	Q	292H
E1-01	Input voltage setting	Set the Inverter input voltage in 1 volt. This set value will be the basis for the protection functions.	155 to 255 *3	200 V *3	No	Q	Q	Q	300H
E1-03	V/f pattern selection	0 to E: Select from 15 preset patterns. F: Custom user-set patterns (Applicable for setting E1-04 to E1-10).	0 to F	F	No	Q	Q	No	302H
E1-04	Max. output frequency (FMAX)	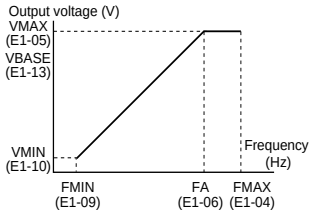	40.0 to 400.0 *4	60.0 Hz *5	No	Q	Q	Q	303H
E1-05	Max. voltage (VMAX)		0.0 to 255.0 *3	200.0 V *3*5	No	Q	Q	Q	304H
E1-06	Base frequency (FA)		0.0 to 400.0	60.0 Hz *5	No	Q	Q	Q	305H
E1-09	Min. output frequency (FMIN)		0.0 to 400.0	1.5 Hz *5	No	Q	Q	Q	308H
E1-13	Base voltage (VBASE)	Change this setting only when making advanced adjustments for V/f in the constant output range. Normally, there is no need to make these settings.	0.0 to 255.0 *3	0.0 V *6	No	A	A	Q	30CH

Constant Number	Name	Description	Setting Range	Factory Setting	Change during Operation	Control Methods			MEMOBUS Register
						V/f	V/f with PG	Open Loop Vector	
E2-01	Motor rated current	Set the motor rated current in amps. This set value becomes the base value for motor protection, torque limit, and torque control. It is set automatically when using auto tuning.	0.32 to 6.40 *8	1.90 A *7	No	Q	Q	Q	30EH
E2-04	Number of motor poles	Set the number of motor poles. The value is set automatically during auto-tuning.	2 to 48	4	No	No	Q	No	311H
F1-01	PG constant	Set the number of pulses per rotation for the PG (pulse generator or encoder) being used. (Do not set as a multiple.)	0 to 60000	600	No	No	Q	No	380H
H4-02	Gain (terminal FM)	Set the voltage level gain for multi-function analog output 1. Set the number of multiples of 10 V to be output as the 100% output for the monitor items. Voltage output from the terminals, however, have a 10 V max. meter calibration function.	0.00 to 2.50	1.00	Yes	Q	Q	Q	41EH
H4-05	Gain (terminal AM)	Set the voltage level gain for multi-function analog output 2. Set the number of multiples of 10 V to be output as the 100% output for the monitor items. Voltage output from the terminals, however, have a 10 V max. meter calibration function.	0.00 to 2.50	0.50	Yes	Q	Q	Q	421H
L1-01	Motor protection selection	Set to enable or disable the motor overload protection function using the electronic thermal relay. 0: Disabled 1: General-purpose motor protection 2: Inverter motor protection 3: Vector motor protection In some applications when the Inverter power supply is turned off frequently, the thermal value is also reset; in such cases even if this constant is set to 1, protection may not be effective. When several motors are connected to one Inverter, set to 0 and ensure that each motor is installed with a protection device.	0 to 3	1	No	Q	Q	Q	480H

Constant Number	Name	Description	Setting Range	Factory Setting	Change during Operation	Control Methods			MEMOBUS Register
						V/f	V/f with PG	Open Loop Vector	
L3-04	Stall prevention selection during deceleration	0: Disabled (Decel according to the setting. If deceleration time setting is too short, a main circuit overvoltage may result.) 1: Enabled (Deceleration is stopped when the main circuit voltage exceeds the overvoltage level. Deceleration restarts when voltage is returned.) 2: Intelligent deceleration mode (Deceleration rate is automatically adjusted so that in Inverter can decelerate in the shortest possible time. Set deceleration time is disregarded.) 3: Enabled (with Braking Resistor Unit) When a braking option (Braking Resistor, Braking Resistor Unit, Braking Unit) is used, always set to 0 or 3.	0 to 3	1	No	Q	Q	Q	492H

* 1. The setting ranges for acceleration/deceleration times depends on the setting of C1-10 (Acceleration/deceleration Time Setting Unit). If C1-10 is set to 0, the setting range is 0.00 to 600.00 (s).
* 2. The factory setting depends on the Inverter capacity.
* 3. These are values for a 200 V class Inverter. Values for a 400 V class Inverter are double.
* 4. The upper setting limit will be 150.0 Hz when C6-01 is set to 0.
* 5. The factory setting will change when the control method is changed. (V/f control factory settings are given.)
* 6. After auto tuning, E1-13 will contain the same value as E1-05.
* 7. The factory setting depends on the Inverter capacity. (The value for a 200 V Class Inverter for 0.4 kW is given.)
* 8. The setting range is from 10% to 200% of the Inverter rated output current. (The value for a 200 V Class Inverter for 0.4 kW is given.)

User Constant Tables

◆ A: Setup Settings

The following settings are made with the environment constants (A constants): Language displayed on the Digital Operator, access level, control method, initialization of constants.

■ Initialize Mode: A1

User constants for the environment modes are shown in the following table.

Constant Number	Name	Description	Setting Range	Factory Setting	Change during Operation	Control Methods			MEMOBUS Register	Page
						V/f	V/f with PG	Open Loop		
A1-00	Language selection for Digital Operator display	Select the language displayed on the Digital Operator (LED). 0: English 1: Japanese 2: German 3: French 4: Italian 5: Spanish 6: Portuguese This constant is not initialized by the initialize operation.	0 to 6	1	Yes	A	A	A	100H	-
A1-01	Constant access level	Set the constant access level (set/read.) 0: Monitoring only (Monitoring drive mode and setting A1-01 and A1-04.) 1: Used to select user constant (Only constants set in A2-01 to A2-32 can be read and set.) 2: Advanced (Constants can be read and set in both quick programming mode and advanced programming (A) mode.)	0 to 2	2	Yes	A	A	A	101H	6-123 6-124
A1-02	Control method selection	Select the control method for the Inverter 0: V/f control 1: V/f with PG feedback 2: Open loop vector This constant is not initialized by the initialize operation.	0 to 2	0	No	Q	Q	Q	102H	4-5 4-9 4-17

Constant Number	Name	Description	Setting Range	Factory Setting	Change during Operation	Control Methods			MEMOBUS Register	Page
						V/f	V/f with PG	Open Loop		
A1-03	Initialize	Used to initialize the constants using the specified method. 0: No initializing 1110: Initializes using the User constants 2220: Initializes using a two-wire sequence. (Initializes to the factory setting.) 3330: Initializes using a three-wire sequence.	0 to 3330	0	No	A	A	A	103H	-
A1-04	Password	Password input when a password has been set in A1-05. This function write-protects some constants of the initialize mode. If the password is changed, A1-01 to A1-03 and A2-01 to A2-32 constants can no longer be changed. (Programming mode constants can be changed.)	0 to 9999	0	No	A	A	A	104H	6-123 6-124
A1-05	Password setting	Used to set a four digit number as the password. This constant is not usually displayed. When the Password (A1-04) is displayed, hold down the RESET Key and press the Menu Key and the password will be displayed.	0 to 9999	0	No	A	A	A	105H	6-123

■User-set Constants: A2

The constants set by the user are listed in the following table.

Constant Number	Name	Description	Setting Range	Factory Setting	Change during Operation	Control Methods			MEMOBUS Register	Page
						V/f	V/f with PG	Open Loop		
A2-01 to A2-32	User setting constants	Used to set the constant numbers that can be set/read. (Maximum 32 Constants). Effective when the Constant Access Level (A1-01) is set to 1 (User Program). Only the Constants set in A2-01 to A2-32 can be set/read in programming mode.	b1-01 to o2-08	-	No	A	A	A	106H to 125H	6-124

◆ Application Constants: b

The following settings are made with the application constants (B constants): Operation method selection, DC injection braking, speed searching, timer functions, dwell functions, and energy saving functions.

■Operation Mode Selections: b1

User constants for operation mode selection are shown in the following table.

Constant Number	Name	Description	Setting Range	Factory Setting	Change during Operation	Control Methods			MEMOBUS Register	Page
						V/f	V/f with PG	Open Loop		
b1-01	Reference selection	Set the frequency reference input method. 0: Digital Operator 1: Control circuit terminal (analog input) 2: MEMOBUS communications 3: Option Card 4: Pulse train input	0 to 4	1	No	Q	Q	Q	180H	4-5 6-6 6-66 6-84
b1-02	Operation method selection	Set the run command input method. 0: Digital Operator 1: Control circuit terminal (sequence input) 2: MEMOBUS communications 3: Option Card	0 to 3	1	No	Q	Q	Q	181H	4-5 6-12 6-66 6-84
b1-03	Stopping method selection	Set the stopping method when a stop command is input. 0: Deceleration to stop 1: Coast to stop 2: DC injection braking stop (Stops faster than coast to stop, no regenerative operation.) 3: Coast to stop with timer (Run commands are disregarded during deceleration.)	0 to 3	0	No	Q	Q	Q	182H	4-5 6-15
b1-04	Prohibition of reverse operation	0: Reverse enabled 1: Reverse disabled	0 or 1	0	No	A	A	A	183H	6-55
b1-06	Read sequence input twice	Set the responsiveness of the control inputs (forward/reverse and multi-function inputs.) 0: Two scans every 2 ms (Use for fast responses.) 1: Two scans every 5 ms (Use for possible malfunction due to noise.)	0 or 1	1	No	A	A	A	185H	-

Constant Number	Name	Description	Setting Range	Factory Setting	Change during Operation	Control Methods			MEMOBUS Register	Page
						V/f	V/f with PG	Open Loop		
b1-07	Operation selection after switching to remote mode	Set the operation mode after switching to the Remote mode using the Local/Remote Key. 0: Run signals that are input during mode switching are disregarded. (Run signal must be turned OFF, then turned ON to operate). 1: Run signals become effective immediately after switching to the Remote mode.	0 or 1	0	No	A	A	A	186H	-
b1-08	Run command selection in programming modes	Set an operation interlock in programming modes. 0: Operation Disabled. 1: Operation Enabled (Disabled when Digital Operator is set to select run command (when b1-02 = 0).	0 or 1	0	No	A	A	A	187H	-

■DC Injection Braking: b2

User constants for injection braking are shown in the following table.

Constant Number	Name	Description	Setting Range	Factory Setting	Change during Operation	Control Methods			MEMOBUS Register	Page
						V/f	V/f with PG	Open Loop		
b2-01	Zero speed level (DC injection braking starting frequency)	Set the DC injection braking starting frequency in units of Hz when deceleration to stop is selected. When b2-01 is less than E1-09, E1-09 becomes the DC injection braking starting frequency.	0.0 to 10.0	0.5 Hz	No	A	A	A	189H	6-15
b2-02	DC injection braking current	Sets the DC injection braking current as a percentage of the Inverter rated current.	0 to 100	50%	No	A	A	A	18AH	6-15 6-18
b2-03	DC injection braking time at start	Used to set the time to perform DC injection braking at start in units of 1 second. Used to stop coasting motor and restart it. When the set value is 0, DC injection braking at start is not performed.	0.00 to 10.00	0.00 s	No	A	A	A	18BH	6-18
b2-04	DC injection braking time at stop	Used to set the time to perform DC injection braking at stop in units of 1 second. Used to prevent coasting after the stop command is input. When the set value is 0.00, DC injection braking at stop is not performed.	0.00 to 10.00	0.50 s	No	A	A	A	18CH	6-15

■Speed Search: b3

User constants for the speed search are shown in the following table.

Constant Number	Name	Description	Setting Range	Factory Setting	Change during Operation	Control Methods			MEMOBUS Register	Page
						V/f	V/f with PG	Open Loop		
b3-01	Speed search selection (current detection or speed calculation)	Enables/disables the speed search function for the run command and sets the speed search method. 0:Disabled, speed calculation 1: Enabled, speed calculation 2: Disabled, current detection 3: Enabled, current detection Speed Calculation: When the search is started, the motor speed is calculated and acceleration/deceleration is performed from the calculated speed to the specified frequency (motor direction is also searched). Current Detection: The speed search is started from the frequency when power was momentarily lost and the maximum frequency, and the speed is detected at the search current level.	0 to 3	2*	No	A	A	A	191H	6-57
b3-02	Speed search operating current (current detection)	Sets the speed search operation current as a percentage of the Inverter rated current. Not usually necessary to set. When restarting is not possible with the factory settings, reduce the value.	0 to 200	120%*	No	A	No	A	192H	6-57
b3-03	Speed search deceleration time (current detection)	Sets the output frequency deceleration time during speed search in 1-second units. Set the time for deceleration from the maximum output frequency to the minimum output frequency.	0.1 to 10.0	2.0 s	No	A	No	A	193H	6-57
b3-05	Speed search wait time (current detection or speed calculation)	Sets the contactor operating delay time when there is a contactor on the output side of the Inverter. When a speed search is performed after recovering from a momentary power loss, the search operation is delayed by the time set here.	0.0 to 20.0	0.2 s	No	A	A	A	195H	6-57

* The factory setting will change when the control method is changed. (V/f control factory settings are given.)

■Timer Function: b4

User constants for timer functions are shown in the following table.

Constant Number	Name	Description	Setting Range	Factory Setting	Change during Operation	Control Methods			MEMOBUS Register	Page
						V/f	V/f with PG	Open Loop		
b4-01	Timer function ON-delay time	Sets the timer function output ON-delay time (dead band) for the timer function input, in 1-second units. Enabled when a timer function is set in H1-□□ or H2-□□.	0.0 to 300.0	0.0 s	No	A	A	A	1A3H	6-96
b4-02	Timer function OFF-delay time	Sets the timer function output OFF-delay time (dead band) for the timer function input, in 1-second units. Enabled when a timer function is set in H1-□□ or H2-□□	0.0 to 300.0	0.0 s	No	A	A	A	1A4H	6-96

■PID Control: b5

User constants for PID control are shown in the following table.

Constant Number	Name	Description	Setting Range	Factory Setting	Change during Operation	Control Methods			MEMOBUS Register	Page
						V/f	V/f with PG	Open Loop		
b5-01	PID control mode selection	0: Disabled 1: Enabled (Deviation is D-controlled.) 2: Enabled (Feedback value is D-controlled.) 3: Enabled (frequency reference + PID output, D control of deviation) 4: Enabled (frequency reference + PID output, D control of feedback value).	0 to 4	0	No	A	A	A	1A5H	6-99
b5-02	Proportional gain (P)	Sets P-control proportional gain as a percentage. P-control is not performed when the setting is 0.00.	0.00 to 25.00	1.00	Yes	A	A	A	1A6H	6-88
b5-03	Integral (I) time	Sets I-control integral time in 1-second units. I-control is not performed when the setting is 0.0.	0.0 to 360.0	1.0 s	Yes	A	A	A	1A7H	6-99
b5-04	Integral (I) limit	Sets the I-control limit as a percentage of the maximum output frequency.	0.0 to 100.0	100.0%	Yes	A	A	A	1A8H	6-99
b5-05	Derivative (D) time	Sets D-control derivative time in 1-second units. D-control is not performed when the setting is 0.00.	0.00 to 10.00	0.00 s	Yes	A	A	A	1A9H	6-99
b5-06	PID limit	Sets the limit for PID-control as a percentage of the maximum output frequency.	0.0 to 100.0	100.0%	Yes	A	A	A	1AAH	6-99
b5-07	PID offset adjustment	Sets the offset after PID-control as a percentage of the maximum output frequency.	-100.0 to +100.0	0.0%	Yes	A	A	A	1ABH	6-99
b5-08	PID primary delay time constant	Sets the time constant for low pass filter for PID-control outputs in 1-second units. Not usually necessary to set.	0.00 to 10.00	0.00 s	Yes	A	A	A	1ACH	6-99
b5-09	PID output characteristics selection	Select forward/reverse for PID output. 0: PID output is forward. 1: PID output is reverse (reverses the output sign)	0 or 1	0	No	A	A	A	1ADH	6-99
b5-10	PID output gain	Sets output gain.	0.0 to 25.0	1.0	No	A	A	A	1AEH	6-99
b5-11	PID reverse output selection	0: 0 limit when PID output is negative. 1: Reverses when PID output is negative. 0 limit when reverse prohibit is selected using b1-04.	0 or 1	0	No	A	A	A	1AFH	6-99

Constant Number	Name	Description	Setting Range	Factory Setting	Change during Operation	Control Methods			MEMOBUS Register	Page
						V/f	V/f with PG	Open Loop		
b5-12	Selection of PID feedback command loss detection	0: No detection of loss of PID feedback. 1: Detection of loss of PID feedback. Operation continues during detection, with the fault contact not activated. 2: Detection of loss of PID feedback. Coasts to stop during detection, and fault contact is activated.	0 to 2	0	No	A	A	A	1B0H	6-99
b5-13	PID feedback command loss detection level	Sets the PID feedback loss detection level as a percent of the maximum output frequency.	0 to 100	0%	No	A	A	A	1B1H	6-99
b5-14	PID feedback command loss detection time	Sets the PID feedback loss detection time in seconds.	0.0 to 25.5	1.0 s	No	A	A	A	1B2H	6-99
b5-15	PID sleep function operation level	Set the PID sleep function start frequency.	0.0 to 400.0	0.0 Hz	No	A	A	A	1B3H	6-99
b5-16	PID sleep operation delay time	Set the delay time at the start of the PID sleep function in seconds.	0.0 to 25.5	0.0 s	No	A	A	A	1B4H	6-99
b5-17	Accel/decel time for PID reference	Set the accel/decel time for PID reference in seconds.	0.0 to 25.5	0.0 s	No	A	A	A	1B5H	6-99

■Dwell Functions: b6

User constants for dwell functions are shown in the following table.

Constant Number	Name	Description	Setting Range	Factory Setting	Change during Operation	Control Methods			MEMOBUS Register	Page
						V/f	V/f with PG	Open Loop		
b6-01	Dwell frequency at start	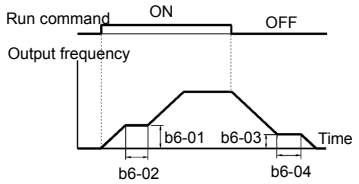 The dwell function is used to hold the frequency temporarily when driving a motor with a heavy load.	0.0 to 400.0	0.0 Hz	No	A	A	A	1B6H	6-24
b6-02	Dwell time at start		0.0 to 10.0	0.0 s	No	A	A	A	1B7H	6-24
b6-03	Dwell frequency at stop		0.0 to 400.0	0.0 Hz	No	A	A	A	1B8H	6-24
b6-04	Dwell time at stop		0.0 to 10.0	0.0 s	No	A	A	A	1B9H	6-24

■Energy Saving: b8

User constants for energy-saving control functions are shown in the following table.

Constant Number	Name	Description	Setting Range	Factory Setting	Change during Operation	Control Methods			MEMOBUS Register	Page
						V/f	V/f with PG	Open Loop		
b8-01	Energy-saving mode selection	Select whether to enable or disable energy-saving control. 0: Disable 1: Enable	0 or 1	0	No	A	A	A	1CCH	-
b8-02	Energy-saving gain	Set the energy-saving gain with the open loop vector control method.	0.0 to 10.0	0.7 *1	Yes	No	No	A	1CDH	-
b8-03	Energy-saving filter time constant	Set the energy-saving filter time constant with the open loop vector control method.	0.00 to 10.0	0.50 s *2	Yes	No	No	A	1CEH	-
b8-04	Energy-saving coefficient	Set the value for the maximum motor efficiency. Set the motor rated capacity in E2-11, and adjust the value by 5% at a time until output power reaches a minimum value.	0.0 to 655.00* 3	*4	No	A	A	No	1CFH	-
b8-05	Power detection filter time constant	Set the time constant for output power detection.	0 to 2000	20 ms	No	A	A	No	1D0H	-
b8-06	Search operation voltage limiter	Set the limit value of the voltage control range during search operation. Perform search operation to optimize operations using minute variations in voltage using energy-saving control. Set to 0 to disable the search operation. 100% is the motor base voltage.	0 to 100	0%	No	A	A	No	1D1H	-

* 1. The factory setting is 1.0 when using V/f control with PG.
* 2. The factory setting is 2.00 s when Inverter capacity is 55 kW min.
* 3. The same capacity as the Inverter will be set by initializing the constants.
* 4. The factory settings depend on the Inverter capacity.

◆ Auto tuning Constants: C

The following settings are made with the auto tuning constants (C constants): Acceleration/deceleration times, s-curve characteristics, slip compensation, torque compensation, speed control, and carrier frequency functions.

■Acceleration/Deceleration: C1

User constants for acceleration and deceleration times are shown in the following table.

Constant Number	Name	Description	Setting Range	Factory Setting	Change during Operation	Control Methods			MEMOBUS Register	Page
						V/f	V/f with PG	Open Loop		
C1-01	Acceleration time 1	Sets the acceleration time to accelerate from 0 to the maximum output frequency, in 1-second units.	0.0 to 6000.0*	10.0 s	Yes	Q	Q	Q	200H	4-5 6-20
C1-02	Deceleration time 1	Sets the deceleration time to decelerate from the maximum output frequency to 0, in 1-second units.			Yes	Q	Q	Q	201H	4-5 6-20
C1-03	Acceleration time 2	The acceleration time when the multi-function input “accel/decel time 1” is set to ON.			Yes	A	A	A	202H	6-20
C1-04	Deceleration time 2	The deceleration time when the multi-function input “accel/decel time 1” is set to ON.			Yes	A	A	A	203H	6-20
C1-05	Acceleration time 3	The acceleration time when the multi-function input “accel/decel time 2” is set to ON.			No	A	A	A	204H	6-20
C1-06	Deceleration time 3	The deceleration time when the multi-function input “accel/decel time 2” is set to ON.			No	A	A	A	205H	6-20
C1-07	Acceleration time 4	The acceleration time when the multi-function input “accel/decel time 1” and “accel/decel time 2” are set to ON.			No	A	A	A	206H	6-20
C1-08	Deceleration time 4	The deceleration time when the multi-function input “accel/decel time 1” and “accel/decel time 2” are set to ON.			No	A	A	A	207H	6-20
C1-09	Emergency stop time	The deceleration time when the multi-function input “Emergency (fast) stop” is set to ON. This is also used if “Emergency (fast) stop is selected as the stopping method when a fault is detected.			No	A	A	A	208H	6-19
C1-10	Accel/decel time setting unit	0: 0.01-second units 1: 0.1-second units	0 or 1	1	No	A	A	A	209H	6-20

Constant Number	Name	Description	Setting Range	Factory Setting	Change during Operation	Control Methods			MEMOBUS Register	Page
						V/f	V/f with PG	Open Loop		
C1-11	Accel/decel time switching frequency	Sets the frequency for automatic switching of the acceleration/deceleration time. Below set frequency: Accel/decel time 4 Above set frequency: Accel/decel time 1 The multi-function input “accel/decel time 1” or “accel/decel time 2” take priority.	0.0 to 400.0	0.0 Hz	No	A	A	A	20AH	-

* The setting range for acceleration/deceleration times will depends on the setting for C1-10. When C1-10 is set to 0, the setting range for acceleration/deceleration times becomes 0.00 to 600.00 seconds.

■S-curve Acceleration/Deceleration: C2

User constants for S-curve characteristics are shown in the following table.

Constant Number	Name	Description	Setting Range	Factory Setting	Change during Operation	Control Methods			MEMOBUS Register	Page
						V/f	V/f with PG	Open Loop		
C2-01	S-curve characteristic time at acceleration start	All sections of the S-curve characteristic time are set in seconds units. When the S-curve characteristic time is set, the accel/decel times will increase by half of the S-curve characteristic times at start and end. 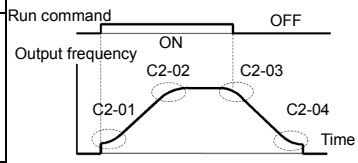 	0.00 to 2.50	0.20 s	No	A	A	A	20BH	-
C2-02	S-curve characteristic time at acceleration end		0.00 to 2.50	0.20 s	No	A	A	A	20CH	-
C2-03	S-curve characteristic time at deceleration start		0.00 to 2.50	0.20 s	No	A	A	A	20DH	-
C2-04	S-curve characteristic time at deceleration end		0.00 to 2.50	0.00 s	No	A	A	A	20EH	-

■Motor Slip Compensation: C3

User constants for slip compensation are shown in the following table.

Constant Number	Name	Description	Setting Range	Factory Setting	Change during Operation	Control Methods			MEMOBUS Register	Page
						V/f	V/f with PG	Open Loop		
C3-01	Slip compensation gain	Used to improve speed accuracy when operating with a load. Usually setting is not necessary. Adjust this constant at the following times. • When actual speed is low, increase the setting. • When actual speed is high, decrease the setting.	0.0 to 2.5	0.0*	Yes	A	No	A	20FH	4-18 6-37
C3-02	Slip compensation primary delay time	Slip compensation primary delay time is set in ms units. Usually setting is not necessary. Adjust this constant at the following times. • Reduce the setting when slip compensation response is slow. • When speed is not stabilized, increase the setting.	0 to 10000	2000 ms *	No	A	No	A	210H	4-18 6-37
C3-03	Slip compensation limit	Sets the slip compensation limit as a percentage of motor rated slip.	0 to 250	200%	No	A	No	A	211H	6-37
C3-04	Slip compensation selection during regeneration	0: Disabled. 1: Enabled. When the slip compensation during regeneration function has been activated, as regeneration capacity increases momentarily, it may be necessary to use a braking option (braking resistor, Braking Resistor Unit or Braking Unit.)	0 or 1	0	No	A	No	A	212H	6-37
C3-05	Output voltage limit operation selection	0: Disabled. 1: Enabled. (The motor flux will be lowered automatically when the output voltage become saturated.)	0 or 1	0	No	No	No	A	213H	6-37

* The factory setting will change when the control method is changed. (V/f control factory settings are given.)

■Torque Compensation: C4

User constants for are torque compensation shown in the following table.

Constant Number	Name	Description	Setting Range	Factory Setting	Change during Operation	Control Methods			MEMOBUS Register	Page
						V/f	V/f with PG	Open Loop		
C4-01	Torque compensation gain	Sets torque compensation gain as a ratio. Usually setting is not necessary. Adjust in the following circumstances: • When the cable is long; increase the set value. • When the motor capacity is smaller than the Inverter capacity (Max. applicable motor capacity), increase the set values. • When the motor is oscillating, decrease the set values. Adjust the setting so that the output current range at low speed rotation does not exceed the Inverter rated output current. Do not alter the torque compensation gain from its default (1.00) when using the open loop vector control method.	0.00 to 2.50	1.00	Yes	A	A	A	215H	4-18 6-41
C4-02	Torque compensation primary delay time constant	The torque compensation delay time is set in ms units. Usually setting is not necessary. Adjust in the following circumstances: • When the motor is oscillating, increase the set values. • When the responsiveness of the motor is low, decrease the set values.	0 to 10000	200 ms *	No	A	A	A	216H	4-17 6-41

* The factory setting will change when the control method is changed. (V/f control factory settings are given.)

■Speed Control (ASR): C5

User constants for speed control are shown in the following table.

Constant Number	Name	Description	Setting Range	Factory Setting	Change during Operation	Control Methods			MEMOBUS Register	Page
						V/f	V/f with PG	Open Loop		
C5-01	ASR proportional (P) gain 1	Sets the proportional gain of the speed loop (ASR.)	0.00 to 300.00	0.20	Yes	No	A	No	21BH	-
C5-02	ASR integral (I) time 1	Sets the integral time of the speed loop (ASR) in 1-second units.	0.000 to 10.000	0.200 s	Yes	No	A	No	21CH	-
C5-03	ASR proportional (P) gain 2	Usually setting is not necessary. Set to change the rotational speed gain. 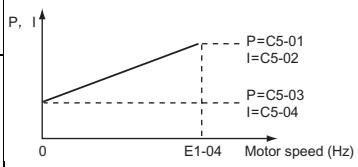	0.00 to 300.00	0.02	Yes	No	A	No	21DH	-
C5-04	ASR integral (I) time 2		0.000 to 10.000	0.050 s	Yes	No	A	No	21EH	-
C5-05	ASR limit	Sets the upper limit for the compensation frequency for the speed control loop (ASR) as a percentage of the maximum output frequency.	0.0 to 20.0	5.0%	No	No	A	No	21FH	-

■Carrier Frequency: C6

User constants for the carrier frequency are shown in the following table.

Constant Number	Name	Description	Setting Range	Factory Setting	Change during Operation	Control Methods			MEMOBUS Register	Page
						V/f	V/f with PG	Open Loop		
C6-01	CT/VT selection	0: CT (low carrier, constant torque, 150% per minute) 1: VT (high carrier, variable torque, 120% per minute)	0 or 1	1	No	Q	Q	Q	223H	4-5 6-2
C6-02	Carrier frequency selection	Select a carrier frequency preset pattern. Select F to enable detailed settings using constants C6-03 to C6-07.	0 to F	6 *1	No	Q	Q	Q	224H	4-5 4-19 6-2
C6-03	Carrier frequency upper limit	Set the carrier frequency upper limit and lower limit in kHz units. The carrier frequency gain is set as follows: With the vector control method, the upper limit of the carrier frequency is fixed in C6-03. 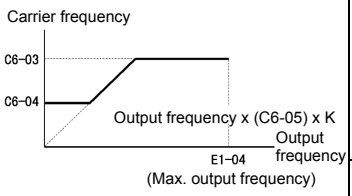 K is a coefficient that depends on the setting of C6-03. C6-03 ≥ 10.0 kHz: K = 3 10.0 kHz > C6-03 ≥ 5.0 kHz: K = 2 5.0 kHz > C6-03: K = 1	2.0 to 15.0 *2 *3	15.0 kHz *1	No	A	A	A	225H	6-2
C6-04	Carrier frequency lower limit		0.4 to 15.0 *2 *3	15.0 kHz *1	No	A	A	No	226H	6-2
C6-05	Carrier frequency proportional gain		00 to 99 *3	00	No	A	A	No	227H	6-2

* 1. The factory setting depends on the capacity of the Inverter.
* 2. The setting range depends on the capacity of the Inverter.
* 3. This constant can be monitored or set only when 1 is set for C6-01 and F is set for C6-02.

◆ Reference Constants: d

The following settings are made with the reference constants (d constants): Frequency references.

■Preset Reference: d1

User constants for frequency references are shown in the following table.

Constant Number	Name	Description	Setting Range	Factory Setting	Change during Operation	Control Methods			MEMOBUS Register	Page
						V/f	V/f with PG	Open Loop		
d1-01	Frequency reference 1	Sets the frequency reference in the units used in o1-03.	0 to 400.00	0.00 Hz	Yes	Q	Q	Q	280H	4-6 6-11
d1-02	Frequency reference 2	The frequency reference when multi-step speed command 1 is ON for a multi-function input.		0.00 Hz	Yes	Q	Q	Q	281H	4-6 6-11
d1-03	Frequency reference 3	The frequency reference when multi-step speed command 2 is ON for a multi-function input.		0.00 Hz	Yes	Q	Q	Q	282H	4-6 6-11
d1-04	Frequency reference 4	The frequency reference when multi-step speed commands 1 and 2 are ON for multi-function inputs.		0.00 Hz	Yes	Q	Q	Q	283H	4-6 6-11
d1-05	Frequency reference 5	The frequency when multi-step speed command 3 is ON for a multi-function input.		0.00 Hz	Yes	A	A	A	284H	6-11
d1-06	Frequency reference 6	The frequency reference when multi-step speed commands 1 and 3 are ON for multi-function inputs.		0.00 Hz	Yes	A	A	A	285H	6-11
d1-07	Frequency reference 7	The frequency reference when multi-step speed commands 2 and 3 are ON for multi-function inputs.		0.00 Hz	Yes	A	A	A	286H	6-11
d1-08	Frequency reference 8	The frequency reference when multi-step speed commands 1, 2, and 3 are ON for multi-function inputs.		0.00 Hz	Yes	A	A	A	287H	6-11
d1-09	Frequency reference 9	The frequency reference when multi-step speed command 4 is ON for a multi-function input.		0.00 Hz	Yes	A	A	A	288H	-
d1-10	Frequency reference 10	The frequency reference when multi-step speed commands 1 and 4 are ON for multi-function inputs.		0.00 Hz	Yes	A	A	A	28BH	-
d1-11	Frequency reference 11	The frequency reference when multi-step speed commands 2 and 4 are ON for a multi-function inputs.		0.00 Hz	Yes	A	A	A	28CH	-

Constant Number	Name	Description	Setting Range	Factory Setting	Change during Operation	Control Methods			MEMOBUS Register	Page
						V/f	V/f with PG	Open Loop		
d1-12	Frequency reference 12	The frequency reference when multi-step speed commands 1, 2, and 4 are ON for multi-function inputs.	0 to 400.00	0.00 Hz	Yes	A	A	A	28DH	-
d1-13	Frequency reference 13	The frequency reference when multi-step speed commands 3 and 4 are ON for multi-function inputs.		0.00 Hz	Yes	A	A	A	28EH	-
d1-14	Frequency reference 14	The frequency reference when multi-step speed commands 1, 3, and 4 are ON for multi-function inputs.		0.00 Hz	Yes	A	A	A	28FH	-
d1-15	Frequency reference 15	The frequency reference when multi-step speed commands 2, 3, and 4 are ON for multi-function inputs.		0.00 Hz	Yes	A	A	A	290H	-
d1-16	Frequency reference 16	The frequency reference when multi-step speed commands 1, 2, 3, and 4 are ON for multi-function inputs.		0.00 Hz	Yes	A	A	A	291H	-
d1-17	Jog frequency reference	The frequency reference when the jog frequency reference selection, FJOG command, or RJOG command is ON.		6.00 Hz	Yes	Q	Q	Q	292H	4-6 6-74

Note The unit is set in o1-03 (frequency units of reference setting and monitor, default: 0.01 Hz).

■Reference Limits: d2

User constants for frequency reference limits are shown in the following table.

Constant Number	Name	Description	Setting Range	Factory Setting	Change during Operation	Control Methods			MEMOBUS Register	Page
						V/f	V/f with PG	Open Loop		
d2-01	Frequency reference upper limit	Set the output frequency upper limit as a percentage of the maximum output frequency.	0.0 to 110.0	100.0%	No	A	A	A	289H	6-35 6-69
d2-02	Frequency reference lower limit	Sets the output frequency lower limit as a percentage of the maximum output frequency.	0.0 to 110.0	0.0%	No	A	A	A	28AH	6-35 6-69
d2-03	Master speed reference lower limit	Set the master speed reference lower limit as a percentage of the maximum output frequency.	0.0 to 110.0	0.0%	No	A	A	A	293H	6-35 6-69

■Jump Frequencies: d3

User constants for jump frequencies are shown in the following table.

Constant Number	Name	Description	Setting Range	Factory Setting	Change during Operation	Control Methods			MEMOBUS Register	Page
						V/f	V/f with PG	Open Loop		
d3-01	Jump frequency 1	Set the center values of the jump frequencies in Hz. This function is disabled by setting the jump frequency to 0 Hz. Always ensure that the following applies: d3-01 ≥ d3-02 ≥ d3-03 Operation in the jump frequency range is prohibited except during acceleration and deceleration for smooth speed change.	0.0 to 400.0	0.0 Hz	No	A	A	A	294H	6-28
d3-02	Jump frequency 2			0.0 Hz	No	A	A	A	295H	6-28
d3-03	Jump frequency 3			0.0 Hz	No	A	A	A	296H	6-28
d3-04	Jump frequency width	Sets the jump frequency bandwidth in Hz. The jump frequency width will be the jump frequency ± d3-04.	0.0 to 20.0	1.0 Hz	No	A	A	A	297H	6-28

■Reference Frequency Hold: d4

User constants for the reference frequency hold function are shown in the following table.

Constant Number	Name	Description	Setting Range	Factory Setting	Change during Operation	Control Methods			MEMOBUS Register	Page
						V/f	V/f with PG	Open Loop		
d4-01	Frequency reference hold function selection	Sets whether or not the frequency reference during hold will be recorded. 0: Disabled (when operation is stopped or the power is turned on again starts at 0.) 1: Enabled (when operation is stopped or the power is turned on again starts at the previous hold frequency.) This function is available when the multi-function inputs “accel/decel Ramp Hold” or “up/down” commands are set.	0 or 1	0	No	A	A	A	298H	6-68
d4-02	+ - Speed limits	Set the frequency to be add to or subtracted from the analog frequency reference as a percent of the maximum output frequency. Enabled when the increase (+) speed command or decrease (-) speed command is set for a multi-function input.	0 to 100	10%	No	A	A	A	299H	6-72

■Field Weakening: d6

User constants for the field weakening command are shown in the following table.

Constant Number	Name	Description	Setting Range	Factory Setting	Change during Operation	Control Methods			MEMOBUS Register	Page
						V/f	V/f with PG	Open Loop		
d6-01	Field weakening level	Set the Inverter output voltage when the field weakening command is input. It is enabled when the field weakening command is set for a multi-function input. Set the level as a percentage of voltage set in the V/f pattern.	0 to 100	80%	No	A	A	No	2A0H	-
d6-02	Field frequency	Set the lower limit in hertz of the frequency range where field control is valid. The field weakening command is valid only at frequencies above this setting and only when the speed is in agreement with the current speed reference.	0.0 to 400.0	0.0 Hz	No	A	A	No	2A1H	-

◆ Motor Constant Constants: E

The following settings are made with the motor constant constants (E constants): V/f characteristics and motor constants.

■V/f Pattern: E1

User constants for V/f characteristics are shown in the following table.

Constant Number	Name	Description	Setting Range	Factory Setting	Change during Operation	Control Methods			MEMOBUS Register	Page
						V/f	V/f with PG	Open Loop		
E1-01	Input voltage setting	Set the Inverter input voltage in 1 volt. This setting is used as a reference value in protection functions.	155 to 255 *1	200 V *1	No	Q	Q	Q	300H	4-6 6-110
E1-03	V/f pattern selection	0 to E: Select from the 15 preset patterns. F: Custom user-set patterns (Applicable for settings E1-04 to E1-10.)	0 to F	F	No	Q	Q	No	302H	6-110
E1-04	Max. output frequency	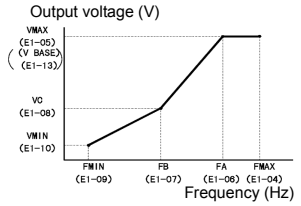 To set V/f characteristics in a straight line, set the same values for E1-07 and E1-09. In this case, the setting for E1-08 will be disregarded. Always ensure that the four frequencies are set in the following manner: E1-04 (FMAX) ≥ E1-06 (FA) > E1-07 (FB) ≥ E1-09 (FMIN)	40.0 to 400.0 *5	60.0 Hz *2	No	Q	Q	Q	303H	6-110
E1-05	Max. voltage		0.0 to 255.0 *1	200.0 V *1*2	No	Q	Q	Q	304H	6-110
E1-06	Base frequency		0.0 to 400.0	60.0 Hz *2	No	Q	Q	Q	305H	6-110
E1-07	Mid. output frequency		0.0 to 400.0	3.0 Hz *2	No	A	A	A	306H	6-110
E1-08	Mid. output frequency voltage		0.0 to 255 *1	15.0 V *1 *2	No	A	A	A	307H	4-18 6-110
E1-09	Min. output frequency		0.0 to 400.0	1.5 Hz *2	No	Q	Q	Q	308H	6-110
E1-10	Min. output frequency voltage		0.0 to 255.0 *1	9.0 V *1 *2	No	A	A	A	309H	4-17 4-18 6-110
E1-11	Mid. output frequency 2	Set only to fine-adjust V/f for the output range. Normally, this setting is not required.	0.0 to 400.0	0.0 Hz *3	No	A	A	A	30AH	6-110
E1-12	Mid. output frequency voltage 2		0.0 to 255.0 *1	0.0 V *3	No	A	A	A	30BH	6-110
E1-13	Base voltage		0.0 to 255.0 *1	0.0 V *4	No	A	A	Q	30CH	6-110

* 1. These are values for a 200 V Class Inverter. Values for a 400 V Class Inverter are double.
* 2. The factory setting will change when the control method is changed. (V/f control factory settings are given.)
* 3. E1-11 and E1-12 are disregarded when set to 0.0.
* 4. E1-13 is set to the same value as E1-05 by autotuning.
* 5. When C6-01 is set to 0, the upper limit of the setting range is 150.0 Hz.

■Motor Setup: E2

User constants for motor 1 are shown in the following table.

Constant Number	Name	Description	Setting Range	Factory Setting	Change during Operation	Control Methods			MEMOBUS Register	Page
						V/f	V/f with PG	Open Loop		
E2-01	Motor rated current	Sets the motor rated current in 1 A units. This set value will become the reference value for motor protection, torque limits and torque control. This constant is automatically set during auto tuning.	0.32 to 6.40 *2	1.90 A *1	No	Q	Q	Q	30EH	6-44 6-108
E2-02	Motor rated slip	Sets the motor rated slip in Hz units. This set value will become the reference value for slip compensation. This constant is automatically set during auto tuning.	0.00 to 20.00	2.90 Hz *1	No	A	A	A	30FH	6-106 6-108
E2-03	Motor no-load current	Sets the motor no-load current in 1 A units. This constant is automatically set during auto tuning.	0.00 to 1.89 *3	1.20 A *1	No	A	A	A	310H	6-108
E2-04	Number of motor poles	Sets the number of motor poles. This constant is automatically set during auto tuning.	2 to 48	4 poles	No	No	Q	No	311H	6-108
E2-05	Motor line-to-line resistance	Sets the motor phase-to-phase resistance in Ω units. This constant is automatically set during auto tuning.	0.000 to 65.000	9.842 Ω *1	No	A	A	A	312H	6-108
E2-06	Motor leakage inductance	Sets the voltage drop due to motor leakage inductance as a percentage of the motor rated voltage. This constant is automatically set during auto tuning.	0.0 to 40.0	18.2% *1	No	No	No	A	313H	6-108
E2-07	Motor iron saturation coefficient 1	Sets the motor iron saturation coefficient at 50% of magnetic flux. This constant is automatically set during tightening.	0.00 to 0.50	0.50	No	No	No	A	314H	6-108
E2-08	Motor iron saturation coefficient 2	Sets the motor iron saturation coefficient at 75% of magnetic flux. This constant is automatically set during auto tuning.	0.00 to 0.75	0.75	No	No	No	A	315H	6-108
E2-10	Motor iron loss for torque compensation	Sets motor iron loss in W units.	0 to 65535	14 W *1	No	A	A	No	317H	6-108
E2-11	Motor rated output	Set the rated output of the motor in units of 0.01 kW. This constant is automatically set during auto tuning.	0.00 to 650.00	0.40 *1	No	Q	Q	Q	318H	6-108

* 1. The factory setting depends upon the Inverter capacity. The value for a 200 V class Inverter of 0.4 kW is given.
* 2. The setting range is 10% to 200% of the Inverter's rated output current. The value for a 200 V class Inverter of 0.4 kW is given.
* 3. The setting range depends upon the Inverter capacity. The value for a 200 V class Inverter of 0.4 kW is given.

■ Motor 2 V/f Pattern: E3

User constants for motor 2 V/f characteristics are shown in the following table.

Constant Number	Name	Description	Setting Range	Factory Setting	Change during Operation	Control Methods			MEMOBUS Register	Page
						V/f	V/f with PG	Open Loop		
E3-01	Motor 2 control method selection	0: V/f control 1: V/f control with PG 2: Open-loop vector control	0 to 2	0	No	A	A	A	319H	-
E3-02	Motor 2 max. output frequency (FMAX)	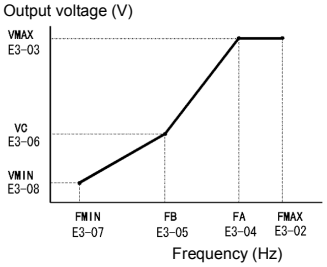 To set V/f characteristics in a straight line, set the same values for E3-05 and E3-07. In this case, the setting for E3-06 will be disregarded. Always ensure that the four frequencies are set in the following manner: E3-02 (FMAX) ≥ E3-04 (FA) > E3-05 (FB) > E3-07 (FMIN)	40.0 to 400.0 *3	60.0 Hz	No	A	A	A	31AH	-
E3-03	Motor 2 max. voltage (VMAX)		0.0 to 255.0 *1	200.0 V *2	No	A	A	A	31BH	-
E3-04	Motor 2 max. voltage frequency (FA)		0.0 to 400.0	60.0 Hz	No	A	A	A	31CH	-
E3-05	Motor 2 mid. output frequency 1 (FB)		0.0 to 400.0	3.0 Hz *2	No	A	A	A	31DH	-
E3-06	Motor 2 mid. output frequency voltage 1 (VC)		0.0 to 255.0 *1	11.0 V *1	No	A	A	A	31EH	-
E3-07	Motor 2 min. output frequency (FMIN)		0.0 to 400.0	0.5 Hz *2	No	A	A	A	31FH	-
E3-08	Motor 2 min. output frequency voltage (VMIN)		0.0 to 255.0 *1	2.0 V *1	No	A	A	A	320H	-

* 1. These are values for a 200 V class Inverter. Values for a 400 V class Inverter are double.
* 2. The factory setting will change when the control method is changed. (V/f control factory settings are given.)
* 3. When C6-01 is set to 0, the upper limit of the setting range is 150.0 Hz.

■Motor 2 Setup: E4

User constants for motor 2 are shown in the following table.

Constant Number	Name	Description	Setting Range	Factory Setting	Change during Operation	Control Methods			MEMOBUS Register	Page
						V/f	V/f with PG	Open Loop		
E4-01	Motor 2 rated current	Sets the motor rated current in 1 A units. This set value will become the reference value for motor protection, torque limits and torque control. This constant is automatically set during auto tuning.	0.32 to 6.40 *2	1.90 A *1	No	A	A	A	321H	6-50
E4-02	Motor 2 rated slip	Sets the motor rated slip in Hz units. This set value will become the reference value for slip compensation. This constant is automatically set during auto tuning.	0.00 to 20.00	2.90 Hz *1	No	A	A	A	322H	-
E4-03	Motor 2 no-load current	Sets the motor no-load current in 1 A units. This constant is automatically set during auto tuning.	0.00 to 1.89 *3	1.20 A *1	No	A	A	A	323H	-
E4-04	Motor 2 number of poles (number of poles)	Sets the number of motor poles. This constant is automatically set during auto tuning.	2 to 48	4 poles	No	No	A	No	324H	-
E4-05	Motor 2 line-to-line resistance	Sets the motor phase-to-phase resistance in Ω units. This constant is automatically set during auto tuning.	0.000 to 65.000	9.842 Ω *1	No	A	A	A	325H	-
E4-06	Motor 2 leakage inductance	Sets the voltage drop due to motor leakage inductance as a percentage of the motor rated voltage. This constant is automatically set during auto tuning.	0.0 to 40.0	18.2% *1	No	No	No	A	326H	-
E4-07	Motor 2 rated capacity	Set the rated output of the motor in units of 0.01 kW. This constant is automatically set during auto tuning.	0.40 to 650.00	0.40 *1	No	A	A	A	327H	-

* 1. The factory setting depends upon the Inverter capacity. The value for a 200 V class Inverter of 0.4 kW is given.

* 2. The setting range is 10% to 200% of the Inverter's rated output current. The values for a 200 V class Inverter of 0.4 kW is given.

* 3. If a multi-function input is set for motor 2 (H1-□□ = 16), the factory setting will depend upon the Inverter capacity. The value for a 200 V class Inverter of 0.4 kW is given.

◆ Option Constants: F

The following settings are made with the option constants (F constants): Settings for Option Cards

■PG Option Setup: F1

User constants for the PG Speed Control Card are shown in the following table.

Constant Number	Name	Description	Setting Range	Factory Setting	Change during Operation	Control Methods			MEMOBUS Register	Page
						V/f	V/f with PG	Open Loop		
F1-01	PG constant	Sets the number of PG (pulse generator or encoder) pulses. Sets the number of pulses per motor revolution (not set as a multiple).	0 to 60000	600	No	No	Q	No	380H	6-125
F1-02	Operation selection at PG open circuit (PGO)	Sets the PG disconnection stopping method. 0: Ramp to stop (Deceleration stop using Deceleration Time 1, C1-02.) 1: Coast to stop 2: Fast stop (Emergency stop using the deceleration time in C1-09.) 3: Continue operation (To protect the motor or machinery, do not normally make this setting.)	0 to 3	1	No	No	A	No	381H	6-125
F1-03	Operation selection at overspeed (OS)	Sets the stopping method when an overspeed (OS) fault occurs. 0: Ramp to stop (Deceleration stop using Deceleration Time 1, C1-02.) 1: Coast to stop 2: Fast stop (Emergency stop using the deceleration time in C1-09.) 3: Continue operation (To protect the motor or machinery, do not normally make this setting.)	0 to 3	1	No	No	A	No	382H	6-125

Constant Number	Name	Description	Setting Range	Factory Setting	Change during Operation	Control Methods			MEMOBUS Register	Page
						V/f	V/f with PG	Open Loop		
F1-04	Operation selection at deviation	Sets the stopping method when a speed deviation (DEV) fault occurs. 0: Ramp to stop (Deceleration stop using Deceleration Time 1, C1-02.) 1: Coast to stop 2: Fast stop (Emergency stop using the deceleration time in C1-09.) 3: Continue operation (DEV is displayed and operation continued.)	0 to 3	3	No	No	A	No	383H	6-125
F1-05	PG rotation direction	0: Phase A leads with forward run command. (Phase B leads with reverse run command.) 1: Phase B leads with forward run command. (Phase A leads with reverse run command.)	0 or 1	0	No	No	A	No	384H	6-125
F1-06	PG division rate (PG pulse monitor)	Sets the division ratio for the PG speed control card pulse output. Division ratio = (1+ n) /m (n=0 or 1 m=1 to 32) F1-06 = □ □□ (n, m) This constant is only effective when a PG-B2 is used. The possible division ratio settings are: 1/32 ≤ F1-06 ≤ 1.	1 to 132	1	No	No	A	No	385H	6-125
F1-07	Integral control during accel/decel enable/disable	Sets integral control during acceleration/deceleration to either enabled or disabled. 0: Disabled (The integral function isn't used while accelerating or decelerating; it is used at constant speeds.) 1: Enabled (The integral function is used at all times.)	0 or 1	0	No	No	A	No	386H	6-126

Constant Number	Name	Description	Setting Range	Factory Setting	Change during Operation	Control Methods			MEMOBUS Register	Page
						V/f	V/f with PG	Open Loop		
F1-08	Overspeed detection level	Sets the overspeed detection method. Frequencies above that set for F1-08 (set as a percentage of the maximum output frequency) that continue to exceed this frequency for the time set in F1-09 are detected as overspeed faults.	0 to 120	115%	No	No	A	No	387H	6-126
F1-09	Overspeed detection delay time		0.0 to 2.0	1.0 s	No	No	A	No	388H	6-126
F1-10	Excessive speed deviation detection level	Sets the speed deviation detection method. Any speed deviation above the F1-10 set level (set as a percentage of the maximum output frequency) that continues for the time set in F1-11 is detected as a speed deviation. Speed deviation is the difference between actual motor speed and the reference command speed.	0 to 50	10%	No	No	A	No	389H	6-126
F1-11	Excessive speed deviation detection delay time		0.0 to 10.0	0.5 s	No	No	A	No	38AH	6-126
F1-12	Number of PG gear teeth 1	Sets the number of teeth on the gears if there are gears between the PG and the motor. $\frac{\text{Input pulses from PG} \times 60}{\text{F1-01}} \times \frac{\text{F1-13}}{\text{F1-12}}$ A gear ratio of 1 will be used if either of these constants is set to 0.	0 to 1000	0	No	No	A	No	38BH	6-126
F1-13	Number of PG gear teeth 2			0	No	No	A	No	38CH	6-126
F1-14	PG open-circuit detection time	Used to set the PG disconnection detection time. PGO will be detected if the detection time continues beyond the set time.	0.0 to 10.0	2.0 s	No	No	A	No	38DH	6-126

■Analog Monitor Cards: F4

User constants for the Analog Monitor Card are shown in the following table.

Constant Number	Name	Description	Setting Range	Factory Setting	Change during Operation	Control Methods			MEMOBUS Register	Page
						V/f	V/f with PG	Open Loop		
F4-01	Channel 1 monitor selection	Effective when the Analog Monitor Card is used. Monitor selection: Set the number of the monitor item to be output. (U1-□□) Gain: Set the multiple of 10 V for outputting monitor items. 4, 10 to 14, 28, 34, 39, 40 cannot be set. 17, 23, 25, 29, 30, 31, 35 are not used. When the AO-12 Analog Monitor Card is used, outputs of ± 10 V are possible. To output ± 10 V, set F4-07 or F4-08 to 1. When the AO-08 Analog Monitor Card is used, only outputs of 0 to +10 V are possible. A meter calibration function is available.	1 to 40	2	No	A	A	A	391H	6-77
F4-02	Channel 1 gain		0.00 to 2.50	1.00	Yes	A	A	A	392H	6-77
F4-03	Channel 2 monitor selection		1 to 40	3	No	A	A	A	393H	6-77
F4-04	Channel 2 gain		0.00 to 2.50	0.50	Yes	A	A	A	394H	6-77
F4-05	Channel 1 output monitor bias	Sets the channel 1 item bias to 100%/10 V when the analog monitor card is used.	-10.0 to 10.0	0.0	Yes	A	A	A	395H	6-77
F4-06	Channel 2 output monitor bias	Sets the channel 2 item bias to 100%/10 V when the analog monitor card is used.	-10.0 to 10.0	0.0	Yes	A	A	A	396H	6-77
F4-07	Analog output signal level for channel 1	0: 0 to 10 V 1: -10 to +10 V	0 or 1	0	No	A	A	A	397H	-
F4-08	Analog output signal level for channel 2	0: 0 to 10 V 1: -10 to +10 V	0 or 1	0	No	A	A	A	398H	6-77

■Digital Output Card (DO-02 and DO-08): F5

User constants for the Digital Output Card are shown in the following table.

Constant Number	Name	Description	Setting Range	Factory Setting	Change during Operation	Control Methods			MEMOBUS Register	Page
						V/f	V/f with PG	Open Loop		
F5-01	Channel 1 output selection	Effective when a Digital Output Card (DO-02 or DO-08) is used. Set the number of the multi-function output to be output.	0 to 37	0	No	A	A	A	399H	6-130
F5-02	Channel 2 output selection	Effective when a Digital Output Card (DO-02 or DO-08) is used. Set the number of the multi-function output to be output.	0 to 37	1	No	A	A	A	39AH	6-130
F5-03	Channel 3 output selection	Effective when a DO-08 Digital Output Card is used. Set the number of the multi-function output to be output.	0 to 37	2	No	A	A	A	39BH	6-130
F5-04	Channel 4 output selection	Effective when a DO-08 Digital Output Card is used. Set the number of the multi-function output to be output.	0 to 37	4	No	A	A	A	39CH	6-130
F5-05	Channel 5 output selection	Effective when a DO-08 Digital Output Card is used. Set the number of the multi-function output to be output.	0 to 37	6	No	A	A	A	39DH	6-130
F5-06	Channel 6 output selection	Effective when a DO-08 Digital Output Card is used. Set the number of the multi-function output to be output.	0 to 37	37	No	A	A	A	39EH	6-130
F5-07	Channel 7 output selection	Effective when a DO-08 Digital Output Card is used. Set the number of the multi-function output to be output.	0 to 37	0F	No	A	A	A	39FH	6-117
F5-08	Channel 8 output selection	Effective when a DO-08 Digital Output Card is used. Set the number of the multi-function output to be output.	0 to 37	0F	No	A	A	A	3A0H	6-130
F5-09	DO-08 output mode selection	Effective when a DO-08 Digital Output Card is used. Set the output mode. 0: 8-channel individual outputs 1: Binary code output 2: Output according to F5-01 to F5-08 settings.	0 to 2	0	No	A	A	A	3A1H	6-130

■Communications Option Cards: F6

User constants for a Communications Option Card are shown in the following table.

Constant Number	Name	Description	Setting Range	Factory Setting	Change during Operation	Control Methods			MEMOBUS Register	Page
						V/f	V/f with PG	Open Loop		
F6-01	Operation selection after communications error	Set the stopping method for communications errors. 0: Deceleration stop using deceleration time in C1-02 1: Coast to stop 2: Emergency stop using deceleration time in C1-09 3: Continue operation	0 to 3	1	No	A	A	A	3A2H	-
F6-02	Input level of external error from Communications Option Card	0: Always detect 1: Detect during operation	0 or 1	0	No	A	A	A	3A3H	-
F6-03	Stopping method for external error from Communications Option Card	0: Deceleration stop using deceleration time in C1-02 1: Coast to stop 2: Emergency stop using deceleration time in C1-09 3: Continue operation	0 to 3	1	No	A	A	A	3A4H	-
F6-04	Trace sampling from Communications Option Card	-	0 to 60000	0	No	A	A	A	3A5H	-

◆ Terminal Function Constants: H

The following settings are made with the terminal function constants (H constants): Settings for external terminal functions.

■Multi-function Contact Inputs: H1

User constants for multi-function contact inputs are shown in the following tables.

Con-stant Number	Name	Description	Setting Range	Factory Setting	Change during Opera-tion	Control Methods			MEMO-BUS Register	Page
						V/f	V/f with PG	Open Loop		
H1-01	Terminal S3 function selection	Multi-function contact input 1	0 to 77	24	No	A	A	A	400H	-
H1-02	Terminal S4 function selection	Multi-function contact input 2	0 to 77	14	No	A	A	A	401H	-
H1-03	Terminal S5 function selection	Multi-function contact input 3	0 to 77	3 (0)*	No	A	A	A	402H	-
H1-04	Terminal S6 function selection	Multi-function contact input 4	0 to 77	4 (3)*	No	A	A	A	403H	-
H1-05	Terminal S7 function selection	Multi-function contact input 5	0 to 77	6 (4)*	No	A	A	A	404H	-

* The values in parentheses indicate initial values when initialized in 3-wire sequence.

Multi-function Contact Input Functions

Setting Value	Function	Control Methods			Page
		V/f	V/f with PG	Open Loop Vec-tor	
0	3-wire sequence (Forward/Reverse Run command)	Yes	Yes	Yes	6-13
1	Local/Remote selection (ON: Operator, OFF: Constant setting)	Yes	Yes	Yes	6-66
2	Option/Inverter selection (ON: Option Card)	Yes	Yes	Yes	6-69
3	Multi-step speed reference 1 When H3-09 is set to 0, this reference is shared with the master/auxiliary speed switch.	Yes	Yes	Yes	6-9
4	Multi-step speed reference 2	Yes	Yes	Yes	6-9
5	Multi-step speed reference 3	Yes	Yes	Yes	6-9
6	Jog frequency command (higher priority than multi-step speed reference)	Yes	Yes	Yes	6-9
7	Accel/decel time 1	Yes	Yes	Yes	6-19
8	External base block NO (NO contact: Base block at ON)	Yes	Yes	Yes	6-62

Setting Value	Function	Control Methods			Page
		V/f	V/f with PG	Open Loop Vec-tor	
9	External base block NC (NC contact: Base block at OFF)	Yes	Yes	Yes	6-67
A	Acceleration/deceleration ramp hold (ON: Acceleration/deceleration stopped, frequency on hold)	Yes	Yes	Yes	6-68
B	OH2 alarm signal input (ON: OH2 will be displayed)	Yes	Yes	Yes	-
C	Multi-function analog input selection (ON: Enable)	Yes	Yes	Yes	-
D	No V/f control with PG (ON: Speed feedback control disabled,) (normal V/f control)	No	Yes	No	-
E	Speed control integral reset (ON: Integral control disabled)	No	Yes	No	-
F	Not used (Set when a terminal is not used)	-	-	-	-
10	Up command (Always set with the down command)	Yes	Yes	Yes	6-68
11	Down command (Always set with the up command)	Yes	Yes	Yes	6-68
12	FJOG command (ON: Forward run at jog frequency d1-17)	Yes	Yes	Yes	6-74
13	RJOG command (ON: Reverse run at jog frequency d1-17)	Yes	Yes	Yes	6-74
14	Fault reset (Reset when turned ON)	Yes	Yes	Yes	7-2
15	Emergency stop. (Normally open condition: Deceleration to stop in deceleration time set in C1-09 when ON.)	Yes	Yes	Yes	6-17
16	Motor switch command (Motor 2 selection)	Yes	Yes	Yes	-
17	Emergency stop (Normally closed condition: Deceleration to stop in deceleration time set in C1-09 when OFF)	Yes	Yes	Yes	6-17
18	Timer function input (Functions are set in b4-01 and b4-02 and the timer function outputs are set in H1-□□ and H2-□□.)	Yes	Yes	Yes	6-96
19	PID control disable (ON: PID control disabled)	Yes	Yes	Yes	6-91
1A	Accel/Decel time 2	Yes	Yes	Yes	6-19
1B	Constants write enable (ON: All constants can be written-in. OFF: All constants other than frequency monitor are write protected.)	Yes	Yes	Yes	6-124
1C	Trim control increase (ON: d4-02 frequency is added to analog frequency reference.)	Yes	Yes	Yes	6-72
1D	Trim control decrease (ON: d4-02 frequency is subtracted from analog frequency reference.)	Yes	Yes	Yes	6-72
1E	Analog frequency reference sample/hold	Yes	Yes	Yes	6-73
20 to 2F	External fault (Desired settings possible) Input mode: NO contact/NC contact, Detection mode: Normal/during operation	Yes	Yes	Yes	6-70
30	PID control integral reset (reset when reset command is input or when stopped during PID control)	Yes	Yes	Yes	6-91
31	PID control integral hold (ON: Hold)	Yes	Yes	Yes	6-91
32	Multi-step speed command 4	Yes	Yes	Yes	-
34	PID soft starter	Yes	Yes	Yes	6-91
35	PID input characteristics switch	Yes	Yes	Yes	6-91

Setting Value	Function	Control Methods			Page
		V/f	V/f with PG	Open Loop Vec-tor	
60	DC injection braking command (ON: Performs DC injection braking)	Yes	Yes	Yes	6-17
61	External search command 1 (ON: Speed search from maximum output frequency)	Yes	No	Yes	6-59
62	External search command 2 (ON: Speed search from the frequency reference)	Yes	No	Yes	6-59
63	Field weakening command (ON: Field weakening control set by d6-01 and d6-02)	Yes	Yes	No	-
64	External speed search command 3	Yes	Yes	Yes	-
65	KEB (deceleration at momentary power loss) command (NO contact)	Yes	Yes	Yes	-
66	KEB (deceleration at momentary power loss) command (NO contact)	Yes	Yes	Yes	-
67	Communications test mode	Yes	Yes	Yes	6-82
68	High-slip braking (HSB)	Yes	Yes	No	-

■ Multi-function Contact Outputs: H2

User constants for multi-function outputs are shown in the following tables.

Con-stant Number	Name	Description	Setting Range	Factory Setting	Change during Opera-tion	Control Methods			MEMO-BUS Register	Page
						V/f	V/f with PG	Open Loop		
H2-01	Terminal M1-M2 function selection (contact)	Multi-function contact out-put	0 to 37	0	No	A	A	A	40BH	-
H2-02	Terminal P1 function selection (open col-lector)	Multi-function contact out-put 1	0 to 37	1	No	A	A	A	40CH	-
H2-03	Terminal P2 function selection (open col-lector)	Multi-function contact out-put 2	0 to 37	2	No	A	A	A	40DH	-

Multi-function Contact Output Functions

Setting Value	Function	Control Methods			Page
		V/f	V/f with PG	Open loop Vec-tor	
0	During run (ON: run command is ON or voltage is being output)	Yes	Yes	Yes	-
1	Zero-speed	Yes	Yes	Yes	-
2	Frequency agree 1 (L4-02 used.)	Yes	Yes	Yes	-
3	Desired frequency agree 1 (ON: Output frequency = ±L4-01, L4-02 used and during fre-quency agree)	Yes	Yes	Yes	-

Setting Value	Function	Control Methods			Page
		V/f	V/f with PG	Open loop Vec-tor	
4	Frequency (FOUT) detection 1 (ON: +L4-01 ≥ output frequency ≥ -L4-01, L4-02 used)	Yes	Yes	Yes	-
5	Frequency (FOUT) detection 2 (ON: Output frequency ≥ +L4-01 or output frequency ≤ -L4-01, L4-02 used)	Yes	Yes	Yes	-
6	Inverter operation ready READY: After initialization, no faults	Yes	Yes	Yes	-
7	During DC bus under voltage (UV) detection	Yes	Yes	Yes	-
8	During base block (ON: during base block)	Yes	Yes	Yes	-
9	Frequency reference selection (ON: Frequency reference from Operator)	Yes	Yes	Yes	-
A	Run command selection status (ON: Run command from Operator)	Yes	Yes	Yes	-
B	Over torque/under torque detection 1 NO (NO contact: Over torque/under torque detection at ON)	Yes	Yes	Yes	6-46
C	Loss of frequency reference (Effective when 1 is set for L4-05)	Yes	Yes	Yes	6-62
D	Braking resistor fault (ON: Resistor overheat or braking transistor fault)	Yes	Yes	Yes	6-64
E	Fault (ON: Fault other than the digital operator communication error CPF00 and CPF01 has occurred.)	Yes	Yes	Yes	-
F	Not used. (Set when the terminals are not used.)	-	-	-	-
10	Minor fault (ON: Alarm displayed)	Yes	Yes	Yes	-
11	Fault reset command active	Yes	Yes	Yes	-
12	Timer function output	Yes	Yes	Yes	6-96
13	Frequency agree 2 (L4-04 used)	Yes	Yes	Yes	-
14	Desired frequency agree 2 (ON: Output frequency = L4-03, L4-04 used, and during frequency agree)	Yes	Yes	Yes	-
15	Frequency detection 3 (ON: Output frequency ≤ -L4-03, L4-04 used)	Yes	Yes	Yes	-
16	Frequency detection 4 (ON: Output frequency ≥ -L4-03, L4-04 used)	Yes	Yes	Yes	-
17	Over torque/under torque detection 1 NC (NC Contact: Torque detection at OFF)	Yes	Yes	Yes	6-46
18	Over torque/under torque detection 2 NO (NO Contact: Torque detection at ON)	Yes	Yes	Yes	6-46
19	Over torque/under torque detection 2 NC (NC Contact: Torque detection at OFF)	Yes	Yes	Yes	6-46
1A	During reverse run (ON: During reverse run)	Yes	Yes	Yes	-
1B	During base block 2 (OFF: During base block)	Yes	Yes	Yes	-
1C	Motor selection (Motor 2 selected)	Yes	Yes	Yes	-
1D	Not used (Set when the terminals are not used)	Yes	Yes	Yes	-
1E	Restart enabled (ON: Restart enabled)	Yes	Yes	Yes	6-63
1F	Motor overload (OL1, including OH3) pre-alarm (ON: 90% or more of the detection level)	Yes	Yes	Yes	6-50
20	Inverter overheat (OH) pre-alarm (ON: Temperature exceeds L8-02 setting)	Yes	Yes	Yes	-
30	During torque limit (current limit) (ON: During torque limit)	No	No	Yes	-
37	During run 2 (ON: Frequency output, OFF: Base block, DC injection braking, initial excitation, operation stop)	Yes	Yes	Yes	-

■Analog Inputs: H3

User constants for analog inputs are shown in the following table.

Constant Number	Name	Description	Setting Range	Factory Setting	Change during Operation	Control Methods			MEMOBUS Register	Page
						V/f	V/f with PG	Open Loop		
H3-02	Frequency Reference Gain (Voltage) (terminal A1)	Sets the frequency when 10 V is input, as a percentage of the maximum output frequency.	0.0 to 1000.0	100.0%	Yes	A	A	A	411H	6-29
H3-03	Frequency Reference Bias (Voltage) (terminal A1)	Sets the frequency when 0 V is input, as a percentage of the maximum frequency.	-100.0 to +100.0	0.0%	Yes	A	A	A	412H	6-29
H3-08	Multi-function analog input terminal A2 signal level selection	0: 0 to +10V with lower limit. 1: 0 to - 10V without lower limit. 2: 4 to 20 mA (9-bit input). Switch current and voltage input using the switch on the control panel.	0 to 2	2	No	A	A	A	417H	6-29
H3-09	Multi-function analog input terminal A2 function selection	Select multi-function analog input function for terminal A2. Refer to the next table.	0 to 1F	0	No	A	A	A	418H	6-29
H3-10	Frequency Reference Gain (Current) (terminal A2)	Sets the input gain (level) when terminal 14 is 10 V (20 mA). Set according to the 100% value for the function set for H3-09.	0.0 to 1000.0	100.0%	Yes	A	A	A	419H	6-29
H3-11	Frequency Reference Bias (Current) (terminal A2)	Sets the input gain (level) when terminal 14 is 0 V (4 mA). Set according to the 100% value for the function set for H3-09.	-100.0 to +100.0	0.0%	Yes	A	A	A	41AH	6-29
H3-12	Analog input filter time constant	Sets primary delay filter time constant in seconds for the two analog input terminal (A1 and A2). Effective for noise control etc.	0.00 to 2.00	0.00 s	No	A	A	A	41BH	6-29
H3-13	Terminal A1/ A2 switching	0: Use terminal A1 analog input as main speed frequency reference. 1: Use terminal A2 analog input as main speed frequency reference. Effective when H3-09 is set to 2.	0 or 1	0	No	A	A	A	41CH	-

H3-09 Settings

Set-ting Value	Function	Contents (100%)	Control Methods			Page
			V/f	V/f with PG	Open Loop Vec-tor	
0	Add to terminal A1	Maximum output frequency	Yes	Yes	Yes	6-29
1	Frequency gain	Frequency reference (voltage) command value	Yes	Yes	Yes	6-29
2	Auxiliary frequency reference (2nd step analog)	Maximum output frequency	Yes	Yes	Yes	6-29
4	Voltage bias	Motor rated voltage (E1-05)	Yes	Yes	No	-
5	Accel/decel change (reduction coeffi-cient)	Set acceleration and deceleration times (C1-01 to C1-08)	Yes	Yes	Yes	6-21
6	DC injection braking current	Inverter rated output current	Yes	Yes	Yes	6-19
7	Over torque/under torque detection level	Motor rated torque for vector control Inverter rated output current for V/f control	Yes	Yes	Yes	6-49
8	Stall prevention level during run	Inverter rated output current	Yes	Yes	No	6-45
9	Frequency reference lower limit level	Maximum output frequency	Yes	Yes	Yes	6-35
A	Jump frequency	Maximum output frequency	Yes	Yes	Yes	6-29
B	PID feedback	Maximum output frequency	Yes	Yes	Yes	6-97
C	PID target value	Maximum output frequency	Yes	Yes	Yes	6-97
E	Motor temperature input	10 V = 100%	Yes	Yes	Yes	6-54
10	Positive torque limit	Motor's rated torque	No	No	Yes	6-44
11	Negative torque limit	Motor's rated torque	No	No	Yes	6-44
12	Regenerative torque limit	Motor's rated torque	No	No	Yes	6-44
15	Positive/negative torque limit	Motor's rated torque	No	No	Yes	6-44
1F	Analog input not used.	-	Yes	Yes	Yes	
13, 14, 16 to 1F	Not used	-	-	-	-	-

■Multi-function Analog Outputs: H4

User constants for multi-function analog outputs are shown in the following table.

Constant Number	Name	Description	Setting Range	Factory Setting	Change during Operation	Control Methods			MEMOBUS Register	Page
						V/f	V/f with PG	Open Loop		
H4-01	Monitor selection (terminal FM)	Sets the number of the monitor item to be output (U1-□□) from terminal FM. 4, 10 to 14, 28, 34, 39, 40 cannot be set. 17, 23, 25, 29, 30, 31 are not used.	1 to 40	2	No	A	A	A	41DH	6-77
H4-02	Multi-function analog output 1 Gain (terminal FM)	Sets the multi-function analog output 1 voltage level gain. Sets the number of multiples at 10V to be output as the 100% output for the monitor item. The maximum output from the terminal is 10 V. A meter calibration function is available.	0.00 to 2.50	1.00	Yes	Q	Q	Q	41EH	4-6 6-77
H4-03	Multi-function analog output 1 Bias (terminal FM)	Sets the multi-function analog output 1 voltage level bias. Sets output characteristic up/down parallel movement as a percentage of 10 V. The maximum output from the terminal is 10 V. A meter calibration function is available.	-10.0 to +10.0	0.0%	Yes	A	A	A	41FH	4-6
H4-04	Monitor selection (terminal AM)	Sets the number of the monitor item to be output (U1-□□) from terminal AM. 4, 10 to 14, 28, 34, 39, 40 cannot be set. 17, 23, 25, 29, 30, 31, 35 are not used.	1 to 40	3	No	A	A	A	420H	4-6 6-77
H4-05	Multi-function analog output 2 Gain (terminal AM)	Set the voltage level gain for multi-function analog output 2. Set the number of multiples of 10 V to be output as the 100% output for the monitor items. The maximum output from the terminal is 10 V. A meter calibration function is available.	0.00 to 2.50	0.50	Yes	Q	Q	Q	421H	4-6 6-77
H4-06	Multi-function analog output 2 Bias (terminal AM)	Sets the multi-function analog output 2 voltage level bias. Sets output characteristic up/down parallel movement as a percentage of 10 V. The maximum output from the terminal is 10 V. A meter calibration function is available.	-10.0 to +10.0	0.0%	Yes	A	A	A	422H	6-77
H4-07	Multi-function Analog output 2 signal level selection	Sets the signal output level for multi-function output 1 (terminal FM) 0: 0 to +10 V output 1: 0 to ±10 V output	0 or 1	0	No	A	A	A	423H	6-77

Constant Number	Name	Description	Setting Range	Factory Setting	Change during Operation	Control Methods			MEMOBUS Register	Page
						V/f	V/f with PG	Open Loop		
H4-08	Multi-function Analog output 2 signal level selection	Sets the signal output level for multi-function output 2 (terminal AM) 0: 0 to +10 V output 1: 0 to ±10 V output	0 or 1	0	No	A	A	A	424H	6-77

■MEMOBUS Communications: H5

User constants for MEMOBUS communications are shown in the following table.

Constant Number	Name	Description	Setting Range	Factory Setting	Change during Operation	Control Methods			MEMOBUS Register	Page
						V/f	V/f with PG	Open Loop		
H5-01	Station address	Set the Inverter's node address.	0 to 20 *	1F	No	A	A	A	425H	6-84
H5-02	Communication speed selection	Set the baud rate for 6CN MEMOBUS communications. 0: 1200 bps 1: 2400 bps 2: 4800 bps 3: 9600 bps 4: 19200 bps	0 to 4	3	No	A	A	A	426H	6-84
H5-03	Communication parity selection	Set the parity for 6CN MEMOBUS communications. 0: No parity 1: Even parity 2: Odd parity	0 to 2	0	No	A	A	A	427H	6-84
H5-04	Stopping method after communication error	Set the stopping method for communications errors. 0: Deceleration to stop using deceleration time in C1-02 1: Coast to stop 2: Emergency stop using deceleration time in C1-09 3: Continue operation	0 to 3	3	No	A	A	A	428H	6-84
H5-05	Communication error detection selection	Set whether or not a communications time-out is to be detected as a communications error. 0: Do not detect. 1: Detect	0 or 1*	1	No	A	A	A	429H	6-84
H5-06	Send wait time	Set the time from the Inverter receiving data to when the Inverter starts to send.	5 to 65	5 ms	No	A	A	A	42AH	6-84
H5-07	RTS control ON/OFF	Select to enable or disable RTS control. 0: Disabled (RTS is always ON) 1: Enabled (RTS turns ON only when sending)	0 or 1	1	No	A	A	A	42BH	6-84

* Set H5-01 to 0 to disable Inverter responses to MEMOBUS communications.

■Pulse Train I/O: H6

User constants for pulse I/O are shown in the following table.

Constant Number	Name	Description	Setting Range	Factory Setting	Change during Operation	Control Methods			MEMOBUS Register	Page
						V/f	V/f with PG	Open Loop		
H6-01	Pulse train input function selection	0: Frequency reference 1: PID feedback value 2: PID target value	0 to 2	0	No	A	A	A	42CH	6-6 6-33 6-99
H6-02	Pulse train input scaling	Set the number of pulses in hertz, taking the reference to be 100%.	1000 to 32000	1440 Hz	Yes	A	A	A	42DH	6-6 6-33
H6-03	Pulse train input gain	Set the input gain level as a percent when the pulse train set in H6-02 is input.	0.0 to 1000.0	100.0%	Yes	A	A	A	42EH	6-33
H6-04	Pulse train input bias	Set the input bias when the pulse train is 0.	-100.0 to 100.0	0.0%	Yes	A	A	A	42FH	6-33
H6-05	Pulse train input filter time	Set the pulse train input primary delay filter time constant in seconds.	0.00 to 2.00	0.10 s	Yes	A	A	A	430H	6-33
H6-06	Pulse train monitor selection	Select the pulse train monitor output items (value of the □□ part of U1-□□). There are two types of monitor items: Speed-related items and PID-related items.	1, 2, 5, 20, 24, 36	2	Yes	A	A	A	431H	6-80
H6-07	Pulse train monitor scaling	Set the number of pulses output when speed is 100% in hertz. Set H6-06 to 2, and H6-07 to 0, to make the pulse train monitor output synchronously to the output frequency.	0 to 32000	1440 Hz	Yes	A	A	A	432H	6-80

◆ Protection Function Constants: L

The following settings are made with the protection function constants (L constants): Motor selection function, power loss ride through function, stall prevention function, frequency detection, torque limits, and hardware protection.

■Motor Overload: L1

User constants for motor overloads are shown in the following table.

Constant Number	Name	Description	Setting Range	Factory Setting	Change during Operation	Control Methods			MEMOBUS Register	Page
						V/f	V/f with PG	Open Loop		
L1-01	Motor protection selection	Sets whether the motor overload function is enabled or disabled at electric thermal overload relay. 0: Disabled 1: General-purpose motor protection 2: Inverter motor protection 3: Vector motor protection In some applications when the Inverter power supply is turned off, the thermal value is reset, so even if this constant is set to 1, protection may not be effective. When several motors are connected to one Inverter, set to 0 and ensure that each motor is installed with a protection device.	0 to 3	1	No	Q	Q	Q	480H	4-6 6-50
L1-02	Motor protection time constant	Sets the electric thermal detection time in minutes. Usually setting is not necessary. The factory setting is 150% overload for one minute. When the motor's overload capacity is known, also set the overload capacity protection time for when the motor is hot started.	0.1 to 5.0	1.0 min	No	A	A	A	481H	6-50
L1-03	Alarm operation selection during motor overheating	Set H3-09 to E and select the operation when the input motor temperature (thermistor) input exceeds the alarm detection level (1.17 V). 0: Decelerate to stop 1: Coast to stop 2: Emergency stop using the deceleration time in C1-09. 3: Continue operation (OH3 on the Operator flashes).	0 to 3	3	No	A	A	A	482H	6-54

Constant Number	Name	Description	Setting Range	Factory Setting	Change during Operation	Control Methods			MEMOBUS Register	Page
						V/f	V/f with PG	Open Loop		
L1-04	Motor overheating operation selection	Set H3-09 to E and select the operation when the motor temperature (thermistor) input exceeds the operation detection level (2.34 V). 0: Decelerate to stop 1: Coast to stop 2: Emergency stop using the deceleration time in C1-09.	0 to 2	1	No	A	A	A	483H	6-54
L1-05	Motor temperature input filter time constant	Set H3-09 to E and set the primary delay time constant for motor temperature (thermistor) inputs in seconds.	0.00 to 10.00	0.20 s	No	A	A	A	484H	6-54

■Power Loss Ride through: L2

User constants for power loss ride throughs are shown in the following table.

Constant Number	Name	Description	Setting Range	Factory Setting	Change during Operation	Control Methods			MEMOBUS Register	Page
						V/f	V/f with PG	Open Loop		
L2-01	Momentary power loss function selection	0: Disabled (main circuit undervoltage (UV) is detected) 1: Enabled (Restarted when the power returns within the time for L2-02. When L2-02 is exceeded, main circuit undervoltage detection.) 2: Enabled while CPU is operating. (Restarts when power returns during control operations. Does not detect main circuit undervoltage.)	0 to 2	0	No	A	A	A	485H	6-56
L2-02	Momentary power loss ride-thru time	Ride through time, when Momentary Power Loss Selection (L2-01) is set to 1, in units of seconds.	0 to 2.0	0.1 s *	No	A	A	A	486H	6-56
L2-03	Min. base block time	Sets the Inverter's minimum base block time in units of one second, when the Inverter is restarted after power loss ride-through. Sets the time to approximately 0.7 times the motor secondary circuit time constant. When an over current or overvoltage occurs when starting a speed search or DC injection braking, increase the set values.	0.1 to 5.0	0.1 s *1	No	A	A	A	487H	6-56 6-57

Constant Number	Name	Description	Setting Range	Factory Setting	Change during Operation	Control Methods			MEMOBUS Register	Page
						V/f	V/f with PG	Open Loop		
L2-04	Voltage recovery time	Sets the time required to return the Inverter output voltage to normal voltage at the completion of a speed search, in units of one second. Sets the time required to recover from 0 V to the maximum voltage.	0.0 to 5.0	0.3 s *1	No	A	A	A	488H	6-56 6-57
L2-05	Under voltage detection level	Sets the main circuit under voltage (UV) detection level (main circuit DC voltage) in V units. Usually setting is not necessary. Insert an AC reactor in the Inverter input side to lower the main circuit under voltage detection level.	150 to 210 *2	190 V *2	No	A	A	A	489H	6-49
L2-06	KEB deceleration time	Sets in seconds the time required to decelerate from the speed where the deceleration at momentary power loss command (KEB) is input to zero speed.	0.0 to 200.0	0.0 s	No	A	A	A	48AH	-
L2-07	Momentary recovery time	Set in seconds the time to accelerate to the set speed after recovery from a momentary power loss.	0.0 to 25.5	0 s *3	No	A	A	A	48BH	-
L2-08	Frequency reduction gain at KEB start	Sets as a percent the amount to reduce the output frequency at the beginning of deceleration at momentary power loss (KEB). Reduction = slip frequency before KEB operation × L2-08 × 2	0 to 300	100	No	A	A	A	48CH	-

* 1. The factory setting depends upon the Inverter capacity. The value for a 200 V Class Inverter of 0.4 kW is given.
* 2. These are values for a 200 V class Inverter. Value for a 400 V class Inverter is double.
* 3. If the setting is 0, the axis will accelerate to the specified speed over the specified acceleration time (C1-01 to C1-08).

■Stall Prevention: L3

User constants for the stall prevention function are shown in the following table.

Constant Number	Name	Description	Setting Range	Factory Setting	Change during Operation	Control Methods			MEMOBUS Register	Page
						V/f	V/f with PG	Open Loop		
L3-01	Stall prevention selection during accel	0: Disabled (Acceleration as set. With a heavy load, the motor may stall.) 1: Enabled (Acceleration stopped when L3-02 level is exceeded. Acceleration starts again when the current is returned.) 2: Intelligent acceleration mode (Using the L3-02 level as a basis, acceleration is automatically adjusted. Set acceleration time is disregarded.)	0 to 2	1	No	A	A	A	48FH	6-24
L3-02	Stall prevention level during accel	Effective when L3-01 is set to 1 or 2. Set as a percentage of Inverter rated current. Usually setting is not necessary. The factory setting reduces the set values when the motor stalls.	0 to 200	120% *	No	A	A	A	490H	6-24
L3-03	Stall prevention limit during accel	Sets the lower limit for stall prevention during acceleration, as a percentage of the Inverter rated current, when operation is in the frequency range above E1-06. Usually setting is not necessary.	0 to 100	50%	No	A	A	A	491H	6-24
L3-04	Stall prevention selection during decel	0: Disabled (Deceleration as set. If deceleration time is too short, a main circuit overvoltage may result.) 1: Enabled (Deceleration is stopped when the main circuit voltage exceeds the overvoltage level. Deceleration restarts when voltage is returned.) 2: Intelligent deceleration mode (Deceleration rate is automatically adjusted so that in Inverter can decelerate in the shortest possible time setting. Deceleration time is disregarded.) 3: Enabled (with Braking Resistor Unit) When a braking option (Braking Resistor, Braking Resistor Unit, Braking Unit) is used, always set to 0 or 3.	0 to 3	1	No	Q	Q	Q	492H	4-6 6-27

Constant Number	Name	Description	Setting Range	Factory Setting	Change during Operation	Control Methods			MEMOBUS Register	Page
						V/f	V/f with PG	Open Loop		
L3-05	Stall prevention selection during running	0: Disabled (Runs as set. With a heavy load, the motor may stall.) 1: Deceleration time 1 (the deceleration time for the stall prevention function is C1-02.) 2: Deceleration time 2 (the deceleration time for the stall prevention function is C1-04.)	0 to 2	1	No	A	A	No	493H	6-45
L3-06	Stall prevention level during running	Effective when L3-05 is 1 or 2. Set as a percentage of the Inverter rated current. Usually setting is not necessary. The factory setting reduces the set values when the motor stalls.	30 to 200	120% *	No	A	A	No	494H	6-45

* The initial value when C6-01 is set to 1 is given. If C6-01 is set to 0, the initial value will be 150%.

■Reference Detection: L4

User constants for the reference detection function are shown in the following table.

Constant Number	Name	Description	Setting Range	Factory Setting	Change during Operation	Control Methods			MEMOBUS Register	Page
						V/f	V/f with PG	Open Loop		
L4-01	Speed agreement detection level	Effective when "Desired frequency (ref/setting) agree 1," "Frequency detection 1," or "Frequency detection 2" is set for a multi-function output. Frequencies to be detected are set in Hz units.	0.0 to 400.0	0.0 Hz	No	A	A	A	499H	-
L4-02	Speed agreement detection width	Effective when "Frequency (speed) agree 1," "Desired frequency (speed) agree 1," or "Frequency (FOUT) detection 1," is set for a multi-function output. Sets the frequency detection width in Hz units.	0.0 to 20.0	2.0 Hz	No	A	A	A	49AH	-
L4-03	Speed agreement detection level (+/-)	Effective when "Desired frequency (speed) agree 2," "Desired frequency (speed) agree 1" "Frequency (FOUT) detection 3," or "Frequency (FOUT) detection 4" is set for a multi-function output. Frequency detection width is set in Hz units.	-400.0 to +400.0	0.0 Hz	No	A	A	A	49BH	-
L4-04	Speed agreement detection width (+/-)	Effective when "Frequency (speed) agree 2," "Desired frequency (speed) agree 1," or "Frequency detection 4" is set for a multi-function output. Frequency detection width is set in Hz units.	0.0 to 20.0	2.0 Hz	No	A	A	A	49CH	-
L4-05	Operation when frequency reference is missing	0: Stop (Operation follows the frequency reference.) 1: Operation at 80% speed continues. (At 80% of speed before the frequency reference was lost) Frequency reference is lost: Frequency reference dropped over 90% in 400 ms.	0 or 1	0	No	A	A	A	49DH	6-62

■Fault Restart: L5

User constants for restarting faults are shown in the following table.

Constant Number	Name	Description	Setting Range	Factory Setting	Change during Operation	Control Methods			MEMOBUS Register	Page
						V/f	V/f with PG	Open Loop		
L5-01	Number of auto restart attempts	Sets the number of auto restart attempts. Automatically restarts after a fault and conducts a speed search from the run frequency.	0 to 10	0	No	A	A	A	49EH	6-63
L5-02	Auto restart operation selection	Sets whether a fault contact output is activated during fault restart. 0: Not output (Fault contact is not activated.) 1: Output (Fault contact is activated.)	0 or 1	0	No	A	A	A	49FH	6-63

■Torque Detection: L6

User constants for the torque detection function are shown in the following table.

Constant Number	Name	Description	Setting Range	Factory Setting	Change during Operation	Control Methods			MEMOBUS Register	Page
						V/f	V/f with PG	Open Loop		
L6-01	Torque detection selection 1	0: Overtorque/undertorque detection disabled. 1: Overtorque detection only with speed agreement; operation continues after detection (warning). 2: Overtorque detected continuously during operation; operation continues after overtorque (warning). 3: Overtorque detection only with speed agreement; output stopped upon detection (protected operation). 4: Overtorque detected continuously during operation; output stopped upon detection (protected operation). 5: Undertorque detection only with speed agreement; operation continues after detection (warning). 6: Undertorque detected continuously during operation; operation continues after overtorque (warning). 7: Undertorque detection only with speed agreement; output stopped upon detection (protected operation). 8: Undertorque detected continuously during operation; output stopped upon detection (protected operation).	0 to 8	0	No	A	A	A	4A1H	6-47
L6-02	Torque detection level 1	Open loop vector control: Motor rated torque is set as 100%. V/f control: Inverter rated current is set as 100%.	0 to 300	150%	No	A	A	A	4A2H	6-47
L6-03	Torque detection time 1	Sets the over torque/under torque detection time in seconds.	0.0 to 10.0	0.1 s	No	A	A	A	4A3H	6-47

Constant Number	Name	Description	Setting Range	Factory Setting	Change during Operation	Control Methods			MEMOBUS Register	Page
						V/f	V/f with PG	Open Loop		
L6-04	Torque detection selection 2	Output of torque detection 1 is enabled by setting 17 for H2-□□ and output of torque detection 1 is enabled by setting 18 or 19 for H2-□□.	0 to 8	0	No	A	A	A	4A4H	6-47
L6-05	Torque detection level 2		0 to 300	150%	No	A	A	A	4A5H	6-47
L6-06	Torque detection time 2		0.0 to 10.0	0.1 s	No	A	A	A	4A6H	6-47

■Torque Limits: L7

User constants for torque limits are shown in the following table.

Constant Number	Name	Description	Setting Range	Factory Setting	Change during Operation	Control Methods			MEMOBUS Register	Page
						V/f	V/f with PG	Open Loop		
L7-01	Forward drive torque limit	Sets the torque limit value as a percentage of the motor rated torque. Four individual regions can be set. 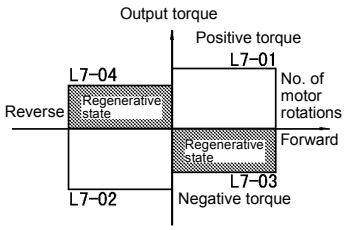	0 to 300	200%	No	No	No	A	4A7H	6-43
L7-02	Reverse drive torque limit		0 to 300	200%	No	No	No	A	4A8H	6-43
L7-03	Forward regenerative torque limit		0 to 300	200%	No	No	No	A	4A9H	6-43
L7-04	Reverse regenerative torque limit		0 to 300	200%	No	No	No	A	4AAH	6-43

■Hardware Protection: L8

User constants for hardware protection functions are shown in the following table.

Constant Number	Name	Description	Setting Range	Factory Setting	Change during Operation	Control Methods			MEMOBUS Register	Page
						V/f	V/f with PG	Open Loop		
L8-01	Protect selection for internal DB resistor (Type ERF)	0: Disabled (no overheating protection) 1: Enabled (overheating protection)	0 or 1	0	No	A	A	A	4ADH	6-64
L8-02	Overheat pre-alarm level	Sets the detection temperature for the Inverter overheat detection pre-alarm in °C. The pre-alarm detects when the cooling fin temperature reaches the set value.	50 to 130	95 °C*	No	A	A	A	4AEH	6-65

Constant Number	Name	Description	Setting Range	Factory Setting	Change during Operation	Control Methods			MEMOBUS Register	Page
						V/f	V/f with PG	Open Loop		
L8-03	Operation selection after overheat pre-alarm	Sets the operation for when the Inverter overheat pre-alarm goes ON. 0: Decelerate to stop in deceleration time C1-02. 1: Coast to stop 2: Fast stop in fast-stop time C1-09. 3: Continue operation (Monitor display only.) A fault will be given in setting 0 to 2 and a minor fault will be given in setting 3.	0 to 3	3	No	A	A	A	4AFH	6-65
L8-05	Input open-phase protection selection	0: Disabled 1: Enabled (Detects if input power supply open-phase, power supply voltage imbalance or main circuit electrostatic capacitor deterioration occurs.)	0 or 1	0	No	A	A	A	4B1H	-
L8-07	Output open-phase protection selection	0: Disabled 1: Enabled (Output open-phase detected at less than 5% of Inverter rated current.) When applied motor capacity is small for Inverter capacity, output open-phase may be falsely detected. In this case, set to 0.	0 or 1	0	No	A	A	A	4B3H	-
L8-09	Ground protection selection	0:Disabled 1:Enabled	0 or 1	1	No	A	A	A	4B5H	-
L8-10	Cooling fan control selection	Set the ON/OFF control for the cooling fan. 0: ON only during operation 1: ON whenever power is ON	0 or 1	0	No	A	A	A	4B6H	-
L8-11	Cooling fan control delay time	Set the time in seconds to delay turning OFF the cooling fan after the cooling fan OFF command is received.	0 to 300	60 s	No	A	A	A	4B7H	-
L8-12	Ambient temperature	Set the ambient temperature.	45 to 60	45 °C*	No	A	A	A	4B8H	-
L8-15	OL2 characteristics selection at low speeds	0: OL2 characteristics at low speeds disabled. 1: OL2 characteristics at low speeds enabled.	0 or 1	1	No	A	A	A	4BBH	-
L8-19	Soft CLA selection	0: Disable (gain = 0) 1: Enable	0 or 1	1	No	A	A	A	4BFH	-

* The factory setting depends upon the Inverter capacity. The value for a 200 V Class Inverter of 0.4 kW is given.

◆ N: Special Adjustments

The following settings are made with the special adjustments constants (N constants): Hunting prevention and speed feedback detection control.

■Hunting Prevention Function: N1

User constants for hunting prevention are shown in the following table.

Constant Number	Name	Description	Setting Range	Factory Setting	Change during Operation	Control Methods			MEMOBUS Register	Page
						V/f	V/f with PG	Open Loop		
N1-01	Hunting-prevention function selection	0: Hunting-prevention function disabled 1: Hunting-prevention function enabled The hunting-prevention function suppresses hunting when the motor is operating with a light load. This function is enabled in V/f control method only. If high response is to be given priority over vibration suppression, disable the hunting-prevention function.	0 or 1	1	No	A	A	No	580H	6-42
N1-02	Hunting-prevention gain	Set the hunting-prevention gain multiplication factor. Normally, there is no need to make this setting. Make the adjustments as follows: • If vibration occurs with light load, increase the setting. • If the motor stalls, reduce the setting. If the setting is too large, the voltage will be too suppressed and the motor may stall.	0.00 to 2.50	1.00	No	A	A	No	581H	4-17 6-42

■Speed Feedback Protection Control Functions: N2

User constants for speed feedback protection control functions are shown in the following table.

Constant Number	Name	Description	Setting Range	Factory Setting	Change during Operation	Control Methods			MEMOBUS Register	Page
						V/f	V/f with PG	Open Loop		
N2-01	Speed feedback detection control (AFR) gain	Set the internal speed feedback detection control gain using the multiplication function. Normally, there is no need to make this setting. Adjust this constant as follows: • If hunting occurs, increase the set value. • If response is low, decrease the set value. Adjust the setting by 0.05 at a time, while checking the response.	0.00 to 10.00	1.00	No	No	No	A	584H	4-18 6-42
N2-02	Speed feedback detection control (AFR) time constant	Set the time constant to decide the rate of change in the speed feedback detection control.	0 to 2000	50 ms	No	No	No	A	585H	6-42
N2-03	Speed feedback detection control (AFR) time constant 2	Set the time constant to decide the amount of change in the speed.	0 to 2000	750 ms	No	No	No	A	586H	6-42

■High-slip Braking: N3

User constants for high-slip braking are shown in the following table.

Constant Number	Name	Description	Setting Range	Factory Setting	Change during Operation	Control Methods		MEMOBUS Register	Page
						V/f	V/f with PG		
N3-01	High-slip braking deceleration frequency width	Sets the frequency width for deceleration during high-slip braking as a percent, taking the Maximum Frequency (E1-04) as 100%.	1 to 20	5%	No	A	A	588H	-
N3-02	High-slip braking current limit	Sets the current limit for deceleration during high-slip braking as a percent, taking the motor rated current as 100%. The setting value must be 150% of the Inverter rated current or less.	100 to 200	150%	No	A	A	589H	-
N3-03	High-slip braking stop dwell time	Set in seconds the dwell time for the output frequency for FMIN (1.5 Hz) during V/f control. Effective only during deceleration for high-slip braking.	0.1 to 10.0	1.0 s	No	A	A	58AH	-

Constant Number	Name	Description	Setting Range	Factory Setting	Change during Operation	Control Methods		MEMOBUS Register	Page
						V/f	V/f with PG		
N3-04	High-slip braking OL time	Set the OL time when the output frequency does not change for some reason during deceleration for high-slip braking.	30 to 1200	40 s	No	A	A	58BH	-

◆ Digital Operator Constants: o

The following settings are made with the Digital Operator constants (o constants): Multi-function selections and the copy function.

■Monitor Select: o1

User constants for Digital Operator Displays are shown in the following table.

Constant Number	Name	Description	Setting Range	Factory Setting	Change during Operation	Control Methods			MEMOBUS Register	Page
						V/f	V/f with PG	Open Loop		
o1-01	Monitor selection	Set the number of the monitor item to be displayed in the earliest 4 monitor items. (U1-□□) The output monitor voltage (factory setting) can be changed.	4 to 33	6	Yes	A	A	A	500H	-
o1-02	Monitor selection after power up	Sets the monitor item to be displayed when the power is turned on. 1: Frequency reference 2: Output frequency 3: Output current 4: The monitor item set for o1-01	1 to 4	1	Yes	A	A	A	501H	6-117

Constant Number	Name	Description	Setting Range	Factory Setting	Change during Operation	Control Methods			MEMOBUS Register	Page
						V/f	V/f with PG	Open Loop		
o1-03	Frequency units of reference setting and monitor	Sets the units that will be set and displayed for the frequency reference and frequency monitor. 0: 0.01 Hz units 1: 0.01% units (Maximum output frequency is 100%) 2 to 39: r/min units (Sets the motor poles.) 40 to 39999: User desired display Set the desired values for setting and display for the max. output frequency. □□□□□ Set 4-digit number excluding the decimal point. Set the number of digits below the decimal point to display. Example: When the max. output frequency value is 200.0, set 12000	0 to 39999	0	No	A	A	A	502H	6-117

■Multi-function Selections: o2

User constants for Digital Operator key functions are shown in the following table.

Constant Number	Name	Description	Setting Range	Factory Setting	Change during Operation	Control Methods			MEMOBUS Register	Page
						V/f	V/f with PG	Open Loop		
o2-01	LOCAL/ REMOTE key enable/ disable	Sets the Digital Operator Local/ Remote Key 0: Disabled 1: Enabled (Switches between the Digital Operator and the constant settings.)	0 or 1	1	No	A	A	A	505H	6-117
o2-02	STOP key during control circuit terminal operation	Sets the Stop Key in the run mode. 0: Disabled (When the run command is issued from and external terminal, the Stop Key is disabled.) 1: Enabled (Always effective even during run.)	0 or 1	1	No	A	A	A	506H	6-117
o2-03	User constant initial value	Clears or stores user initial values. 0: Stores/not set 1: Begins storing (Records the set constants as user initial values.) 2: All clear (Clears all recorded user initial values) When the set constants are recorded as user initial values, 1110 will be set in A1-03.	0 to 2	0	No	A	A	A	507H	6-117
o2-04	kVA selection	Do not set unless using a control board from an Inverter with a different capacity.	0 to FF	0*	No	A	A	A	508H	-
o2-05	Frequency reference setting method selection	When the frequency reference is set on the Digital Operator frequency reference monitor, sets whether the Enter Key is necessary. 0: Enter Key needed 1: Enter Key not needed When set to 1, the Inverter accepts the frequency reference without Enter Key operation.	0 or 1	0	No	A	A	A	509H	6-118
o2-06	Operation selection when digital operator is disconnected	Sets the operation when the Digital Operator is disconnected. 0: Disabled (Operation continues even if the Digital Operator is disconnected.) 1: Enabled (OPR is detected at Digital Operator disconnection. Inverter output is cut off, and fault contact is operated.)	0 or 1	0	No	A	A	A	50AH	-
o2-07	Cumulative operation time setting	Sets the cumulative operation time in hour units. Operation time is calculated from the set values.	0 to 65535	0 hr	No	A	A	A	50BH	6-118

Constant Number	Name	Description	Setting Range	Factory Setting	Change during Operation	Control Methods			MEMOBUS Register	Page
						V/f	V/f with PG	Open Loop		
o2-08	Cumulative operation time selection	0: Cumulative time when the Inverter power is on. (All time while the Inverter power is on is accumulated.) 1: Cumulative Inverter run time. (Only Inverter output time is accumulated.)	0 or 1	0	No	A	A	A	50CH	-
o2-10	Fan operation time setting	Set the initial value of the fan operation time using time units. The operation time accumulates from the set value.	0 to 65535	0 hr	No	A	A	A	50EH	6-118

* The factory setting depends upon the Inverter capacity. The value for a 200 V class Inverter of 0.4 kW is given.

■ Copy Function: o3

User constants for the copy function are shown in the following table.

Constant Number	Name	Description	Setting Range	Factory Setting	Change during Operation	Control Methods			MEMOBUS Register	Page
						V/f	V/f with PG	Open Loop		
o3-01	Copy function selection	0: Normal operation 1: READ (Inverter to Operator) 2: COPY (Operator to Inverter) 3: Verify (compare)	0 to 3	0	No	A	A	A	515H	6-119
o3-02	Read permitted selection	0: Read prohibited 1: Read permitted	0 or 1	0	No	A	A	A	516H	6-119

◆ T: Motor Auto tuning

The following settings are made with the motor auto tuning constants (T constants): Settings for auto tuning.

Constant Number	Name	Description	Setting Range	Factory Setting	Change during Operation	Control Methods			MEMOBUS Register	Page
						V/f	V/f with PG	Open Loop		
T1-00	Motor 1/2 selection	Set the location where the auto tuned motor constants are to be stored. 1: E1 to E2 (motor 1) 2: E3 to E4 (motor 2)	1 or 2	1	No	No	No	A	700H	4-12
T1-01	Auto tuning mode selection	Set the auto tuning mode. 0: Rotational auto tuning 1: Stationary auto tuning 2: Stationary auto tuning for line-to-line resistance only	0 to 2 *1	0	No	A	A	A	701H	4-10 4-12
T1-02	Motor output power	Set the output power of the motor in kilowatts.	0.00 to 650.00	0.40 kW	No	A	A	A	702H	4-12
T1-03	Motor rated voltage	Set the rated voltage of the motor in volts.	0 to 255.0*2	200.0 V *2	No	No	No	A	703H	4-12
T1-04	Motor rated current	Set the rated current of the motor in amps.	0.32 to 6.40 *4	1.90 A *3	No	A	A	A	704H	4-12
T1-05	Motor base frequency	Set the base frequency of the motor in hertz.	0 to 400.0*5	60.0 Hz	No	No	No	A	705H	4-12
T1-06	Number of motor poles	Set the number of motor poles.	2 to 48 poles	4 poles	No	No	No	A	706H	4-12
T1-07	Motor base speed	Set the base speed of the motor in r/min.	0 to 24000	1750 r/min	No	No	No	A	707H	4-12

* 1. Set T1-02 and T1-04 when 2 is set for T1-01. Only set value T1-01=2 is possible for V/f control or V/f control with PG.
* 2. These are values for a 200 V class Inverter. Values for a 400 V class Inverter are double.
* 3. The factory setting depends on the Inverter capacity. (The value for a 200 V Class Inverter for 0.4 kW is given.)
* 4. The setting range is from 10% to 200% of the Inverter rated output current. (The value for a 200 V Class Inverter for 0.4 kW is given.)
* 5. The upper setting limit will be 150.0 Hz when C6-01 is set to 0.

◆ U: Monitor Constants

The following settings are made with the monitor constants (U constants): Setting constants for monitoring in drive mode.

■ Status Monitor Constants: U1

The constants used for monitoring status are listed in the following table.

Constant Number	Name	Description	Output Signal Level During Multi-Function Analog Output	Min. Unit	Control Methods			MEMOBUS Register
					V/f	V/f with PG	Open Loop Vector	
U1-01	Frequency reference	Monitors/sets the frequency reference value.*	10 V: Max. frequency (0 to ± 10 V possible)	0.01 Hz	A	A	A	40H
U1-02	Output frequency	Monitors the output frequency.*	10 V: Max. frequency (0 to ± 10 V possible)	0.01 Hz	A	A	A	41H
U1-03	Output current	Monitors the output current.	10 V: Inverter rated output current (0 to +10 V, absolute value output)	0.1 A	A	A	A	42H
U1-04	Control method	Checks the current control method.	(Cannot be output.)	-	A	A	A	43H
U1-05	Motor speed	Monitors the detected motor speed.*	10 V: Max. frequency (0 to ± 10 V possible)	0.01 Hz	No	A	A	44H
U1-06	Output voltage	Monitors the output voltage reference value in the Inverter.	10 V: 200 VAC (400 VAC) (0 to +10 V output)	0.1 V	A	A	A	45H
U1-07	DC bus voltage	Monitors the main DC voltage in the Inverter.	10 V: 400 VDC (800 VDC) (0 to +10 V output)	1 V	A	A	A	46H
U1-08	Output power	Monitors the output power (internally detected value).	10 V: Inverter capacity (max. applicable motor capacity) (0 to ± 10 V possible)	0.1 kW	A	A	A	47H
U1-09	Torque reference	Monitor the internal torque reference value for vector control.	10 V: Motor rated torque (0 to ± 10 V possible)	0.1%	No	No	A	48H

* The unit is set in o1-03 (frequency reference setting/display unit).

Constant Number	Name	Description	Output Signal Level During Multi-Function Analog Output	Min. Unit	Control Methods			MEMOBUS Register
					V/f	V/f with PG	Open Loop Vector	
U1-10	Input terminal status	Shows input ON/OFF status. U1-10= 1: FWD command (S1) is ON. 1: REV command (S2) is ON. 1: Multi input 1 (S3) is ON. 1: Multi input 2 (S4) is ON. 1: Multi input 3 (S5) is ON. 1: Multi input 4 (S6) is ON. 1: Multi input 5 (S7) is ON.	(Cannot be output.)	-	A	A	A	49H
U1-11	Output terminal status	Shows output ON/OFF status. U1-11= 1: Multi-function contact output 1 (M1-M2) is ON. 1: Multi-funtion contact output 2 (P1) is ON. 1: Multi-funtion contact output 3 (P2) is ON. Not used (always 0). 1: Error output (MA/AB-MC) is ON.	(Cannot be output.)	-	A	A	A	4AH
U1-12	Operation status	Inverter operating status. U1-12= 1: Run 1: Zero speed 1: Reverse 1: Reset signal input 1: Speed agree 1: Inverter ready 1: Minor fault 1: Major fault	(Cannot be output.)	-	A	A	A	4BH
U1-13	Cumulative operation time	Monitors the total operating time of the Inverter. The initial value and the operating time/power ON time selection can be set in o2-07 and o2-08.	(Cannot be output.)	1 hr	A	A	A	4CH
U1-14	Software No. (flash memory)	(Manufacturer's ID number)	(Cannot be output.)	-	A	A	A	4DH

Constant Number	Name	Description	Output Signal Level During Multi-Function Analog Output	Min. Unit	Control Methods			MEMOBUS Register
					V/f	V/f with PG	Open Loop Vector	
U1-15	Terminal A1 input voltage	Monitors the input voltage of the voltage frequency reference. An input of 10 V corresponds to 100%.	10 V: 100% (10 V) (0 to ± 10 V possible)	0.1%	A	A	A	4EH
U1-16	Terminal A2 input voltage	Monitors the input voltage of the multi-function analog input. An input of 10 V corresponds to 100%.	10 V: 100% (10 V) (0 to ±10 V possible)	0.1%	A	A	A	4FH
U1-18	Motor secondary current (Iq)	Monitors the calculated value of the motor secondary current. The motor rated secondary current corresponds to 100%.	10 V: Motor rated secondary current) (0 to ±10 V output)	0.1%	A	A	A	51H
U1-19	Motor exciting current (Id)	Monitors the calculated value of the motor excitation current. The motor rated secondary current corresponds to 100%.	10 V: Motor rated secondary current) (0 to ±10 V output)	0.1%	No	No	A	52H
U1-20	Output frequency after soft-start	Monitors the output frequency after a soft start. The frequency given does not include compensations, such as slip compensation. The unit is set in o1-03.	10 V: Max. frequency (0 to ± 10 V possible)	0.01 Hz	A	A	A	53H
U1-21	ASR input	Monitors the input to the speed control loop. The maximum frequency corresponds to 100%.	10 V: Max. frequency (0 to ± 10 V possible)	0.01 %	No	A	No	54H
U1-22	ASR output	Monitors the output from the speed control loop. The motor rated secondary current corresponds to 100%.	10 V: Motor rated secondary current) (0 to ± 10 V possible)	0.01 %	No	A	No	55H
U1-24	PID feedback value	Monitors the feedback value when PID control is used. The input for the max. frequency corresponds to 100%.	10 V: Max. frequency (0 to ± 10 V possible)	0.01 %	A	A	A	57H
U1-26	Output voltage reference (Vq)	Monitors the Inverter internal voltage reference for motor secondary current control.	10 V: 200 VAC (400 VAC) (0 to ± 10 V possible)	0.1 V	No	No	A	59H
U1-27	Output voltage reference (Vd)	Monitors the Inverter internal voltage reference for motor excitation current control.	10 V: 200 VAC (400 VAC) (0 to ± 10 V possible)	0.1 V	No	No	A	5AH
U1-28	Software No. (CPU)	(Manufacturer's CPU software No.)	(Cannot be output.)	-	A	A	A	5BH
U1-32	ACR output of q axis	Monitors the current control output value for the motor secondary current.	10 V: 100% (0 to ± 10 V possible)	0.1 %	No	No	A	5FH
U1-33	ACR output of d axis	Monitors the current control output value for the motor excitation current.	10 V: 100% (0 to ± 10 V possible)	0.1 %	No	No	A	60H

Constant Number	Name	Description	Output Signal Level During Multi-Function Analog Output	Min. Unit	Control Methods			MEMOBUS Register
					V/f	V/f with PG	Open Loop Vector	
U1-34	OPE fault constant	Shows the first constant number where an OPE fault was detected.	(Cannot be output.)	-	A	A	A	61H
U1-36	PID input volume	PID feedback volume Given as maximum frequency/ 100%	10 V: Max. frequency (0 to ± 10 V possible)	0.01 %	A	A	A	63H
U1-37	PID output volume	PID control output Given as maximum frequency/ 100%	10 V: Max. frequency (0 to ± 10 V possible)	0.01 %	A	A	A	64H
U1-38	PID command	PID command + PID command bias Given as maximum frequency/ 100%	10 V: Max. frequency	0.01 %	A	A	A	65H
U1-39	MEMOBUS communications error code	Shows MEMOBUS errors. U1-40= ,,,,,,,, └1: CRC error └1: Data length error └Not used (always 0). └1: Parity error └1: Overrun error └1: Framing error └1: Timeout └Not used (always 0).	(Cannot be output.)	-	A	A	A	66H
U1-40	Cooling fan operating time	Monitors the total operating time of the cooling fan. The time can be set in 02-10.	(Cannot be output.)	1 hr	A	A	A	68H

■ Fault Trace: U2

User constants for error tracing are shown in the following table.

Constant Number	Name	Description	Output Signal Level During Multi-Function Analog Output	Min. Unit	Control Methods			MEMOBUS Register
					V/f	V/f with PG	Open Loop Vector	
U2-01	Current fault	The contents of the current fault.	(Cannot be output.)	-	A	A	A	80H
U2-02	Previous fault	The contents of the error that occurred just prior to the current fault.		-	A	A	A	81H
U2-03	Reference frequency at fault	The reference frequency when the previous fault occurred.		0.01 Hz	A	A	A	82H
U2-04	Output frequency at fault	The output frequency when the previous fault occurred.		0.01 Hz	A	A	A	83H
U2-05	Output current at fault	The output current when the previous fault occurred.		0.1 A	A	A	A	84H
U2-06	Motor speed at fault	The motor speed when the previous fault occurred.		0.01 Hz	No	A	A	85H
U2-07	Output voltage reference at fault	The output reference voltage when the previous fault occurred.		0.1 V	A	A	A	86H
U2-08	DC bus voltage at fault	The main current DC voltage when the previous fault occurred.		1 V	A	A	A	87H
U2-09	Output power at fault	The output power when the previous fault occurred.		0.1 kW	A	A	A	88H
U2-10	Torque reference at fault	The torque reference when the previous fault occurred. The motor rated torque corresponds to 100%.		0.1%	No	No	A	89H
U2-11	Input terminal status at fault	The input terminal status when the previous fault occurred. The format is the same as for U1-10.		-	A	A	A	8AH
U2-12	Output terminal status at fault	The output terminal status when the previous fault occurred. The format is the same as for U1-11.		-	A	A	A	8BH
U2-13	Operation status at fault	The operating status when the previous fault occurred. The format is the same as for U1-12.		-	A	A	A	8CH
U2-14	Cumulative operation time at fault	The operating time when the previous fault occurred.		1 hr	A	A	A	8DH

Note The following errors are not included in the error trace: CPF00, 01, 02, 03, UV1, and UV2.

■Fault History: U3

User constants for the error log are shown in the following table.

Constant Number	Name	Description	Output Signal Level During Multi-Function Analog Output	Min. Unit	Control Methods			MEMOBUS Register
					V/f	V/f with PG	Open Loop Vector	
U3-01	Most recent fault	The error contents of 1st previous fault.	(Cannot be output.)	-	A	A	A	90H
U3-02	Second most recent fault	The error contents of 2nd previous fault.		-	A	A	A	91H
U3-03	Third most recent fault	The error contents of 3rd previous fault.		-	A	A	A	92H
U3-04	Fourth most recent fault	The error contents of 4th previous fault.		-	A	A	A	93H
U3-05	Cumulative operation time at fault	The total operating time when the 1st previous fault occurred.		1 hr	A	A	A	94H
U3-06	Accumulated time of second fault	The total operating time when the 2nd previous fault occurred.		1 hr	A	A	A	95H
U3-07	Accumulated time of third fault	The total operating time when the 3rd previous fault occurred.		1 hr	A	A	A	96H
U3-08	Accumulated time of fourth fault	The total operating time when the 4th previous fault occurred.		1 hr	A	A	A	97H

Note The following errors are not recorded in the error log: CPF00, 01, 02, 03, UV1, and UV2.

◆ Factory Settings that Change with the Control Method (A1-02)

The factory settings of the following user constants will change if the control method (A1-02) is changed.

Constant Number	Name	Setting Range	Unit	Factory Setting		
				V/f Control A1-02=0	V/F with PG A1-02=1	Open Loop Vector A1-02=2
b3-01	Speed search selection	0 to 3	1	2	3	2
b3-02	Speed search operating current	0 to 200	1%	120	-	100
C3-01	Slip compensation gain	0.0 to 2.5	0.1	0.0	-	1.0
C3-02	Slip compensation primary delay time constant	0 to 10000	1 ms	2000	-	200
C4-02	Torque compensation primary delay time constant	0 to 10000	1 ms	200	200	20
E1-04 E3-02	Max. output frequency (FMAX)	0.0 to 400.0	0.1 Hz	60.0 *2	60.0 *2	60.0
E1-05 E3-03	Max. voltage (VMAX)	0.0 to 255.0	0.1 V	200.0 *2	200.0 *2	200.0
E1-06 E3-04	Base frequency (FA)	0.0 to 400.0	0.1 Hz	60.0 *2	60.0 *2	60.0
E1-07 E3-05	Mid. output frequency (FB)	0.0 to 400.0	0.1 Hz	3.0 *2	3.0 *2	3.0
E1-08 E3-06	Mid. output frequency voltage (VC)*1	0.0 to 255.0 (0.0 to 510.0)	0.1 V	15.0 *2	15.0 *2	11.0
E1-09 E3-07	Min. output frequency (FMIN)	0.0 to 400.0	0.1 Hz	1.5 *2	1.5 *2	0.5
E1-10 E3-08	Min. output frequency voltage (VMIN)*1	0.0 to 255.0 (0.0 to 510.0)	0.1 V	9.0 *2	9.0 *2	2.0

* 1. The settings shown are for 200 V class Inverters. The values will double for 400 V class Inverters.
* 2. Settings vary as shown in the following tables depending on the Inverter capacity and E1-03.

■200 V and 400 V Class Inverters of 0.4 to 1.5 kW

Constant Number	Unit	Factory Setting																Open Loop Vector Control
E1-03	-	0	1	2	3	4	5	6	7	8	9	A	B	C	D	E	F	
E1-04	Hz	50.0	60.0	60.0	72.0	50.0	50.0	60.0	60.0	50.0	50.0	60.0	60.0	90.0	120.0	180.0	60.0	60.0
E1-05 *	V	200.0	200.0	200.0	200.0	200.0	200.0	200.0	200.0	200.0	200.0	200.0	200.0	200.0	200.0	200.0	200.0	200.0
E1-06	Hz	50.0	60.0	50.0	60.0	50.0	50.0	60.0	60.0	50.0	50.0	60.0	60.0	60.0	60.0	60.0	60.0	60.0
E1-07 *	Hz	2.5	3.0	3.0	3.0	25.0	25.0	30.0	30.0	2.5	2.5	3.0	3.0	3.0	3.0	3.0	3.0	3.0
E1-08 *	V	15.0	15.0	15.0	15.0	35.0	50.0	35.0	50.0	19.0	24.0	19.0	24.0	15.0	15.0	15.0	15.0	11.0
E1-09	Hz	1.3	1.5	1.5	1.5	1.3	1.3	1.5	1.5	1.3	1.3	1.5	1.5	1.5	1.5	1.5	1.5	0.5
E1-10 *	V	9.0	9.0	9.0	9.0	8.0	9.0	8.0	9.0	11.0	13.0	11.0	15.0	9.0	9.0	9.0	9.0	2.0

* The settings shown are for 200 V class Inverters. The values will double for 400 V class Inverters.

■200 V and 400 V Class Inverters of 2.2 to 45 kW

Constant Number	Unit	Factory Setting																Open Loop Vector Control
E1-03	-	0	1	2	3	4	5	6	7	8	9	A	B	C	D	E	F	
E1-04	Hz	50.0	60.0	60.0	72.0	50.0	50.0	60.0	60.0	50.0	50.0	60.0	60.0	90.0	120.0	180.0	60.0	60.0
E1-05 *	V	200.0	200.0	200.0	200.0	200.0	200.0	200.0	200.0	200.0	200.0	200.0	200.0	200.0	200.0	200.0	200.0	200.0
E1-06	Hz	50.0	60.0	50.0	60.0	50.0	50.0	60.0	60.0	50.0	50.0	60.0	60.0	60.0	60.0	60.0	60.0	60.0
E1-07 *	Hz	2.5	3.0	3.0	3.0	25.0	25.0	30.0	30.0	2.5	2.5	3.0	3.0	3.0	3.0	3.0	3.0	3.0
E1-08 *	V	14.0	14.0	14.0	14.0	35.0	50.0	35.0	50.0	18.0	23.0	18.0	23.0	14.0	14.0	14.0	14.0	11.0
E1-09	Hz	1.3	1.5	1.5	1.5	1.3	1.3	1.5	1.5	1.3	1.3	1.5	1.5	1.5	1.5	1.5	1.5	0.5
E1-10 *	V	7.0	7.0	7.0	7.0	6.0	7.0	6.0	7.0	9.0	11.0	9.0	13.0	7.0	7.0	7.0	7.0	2.0

* The settings shown are for 200 V class Inverters. The values will double for 400 V class Inverters.

■200 V Class Inverters of 55 to 110 kW and 400 V Class Inverters of 55 to 300 kW

Constant Number	Unit	Factory Setting																Open Loop Vector Control
E1-03	-	0	1	2	3	4	5	6	7	8	9	A	B	C	D	E	F	
E1-04	Hz	50.0	60.0	60.0	72.0	50.0	50.0	60.0	60.0	50.0	50.0	60.0	60.0	90.0	120.0	180.0	60.0	60.0
E1-05 *	V	200.0	200.0	200.0	200.0	200.0	200.0	200.0	200.0	200.0	200.0	200.0	200.0	200.0	200.0	200.0	200.0	200.0
E1-06	Hz	50.0	60.0	50.0	60.0	50.0	50.0	60.0	60.0	50.0	50.0	60.0	60.0	60.0	60.0	60.0	60.0	60.0
E1-07 *	Hz	2.5	3.0	3.0	3.0	25.0	25.0	30.0	30.0	2.5	2.5	3.0	3.0	3.0	3.0	3.0	3.0	3.0
E1-08 *	V	12.0	12.0	12.0	12.0	35.0	50.0	35.0	50.0	15.0	20.0	15.0	20.0	12.0	12.0	12.0	12.0	11.0
E1-09	Hz	1.3	1.5	1.5	1.5	1.3	1.3	1.5	1.5	1.3	1.3	1.5	1.5	1.5	1.5	1.5	1.5	0.5
E1-10 *	V	6.0	6.0	6.0	6.0	5.0	6.0	5.0	6.0	7.0	9.0	7.0	11.0	6.0	6.0	6.0	6.0	2.0

* The settings shown are for 200 V class Inverters. The values will double for 400 V class Inverters.

◆ Factory Settings that Change with the Inverter Capacity (o2-04)

The factory settings of the following user constants will change if the Inverter capacity (o2-04) is changed.

■200 V Class Inverters

Constant Number	Name	Unit	Factory Setting								
-	Inverter Capacity	kW	0.4	0.75	1.5	2.2	3.7	5.5	7.5	11	15
o2-04	kVA selection	-	0	1	2	3	4	5	6	7	8
b8-03	Energy-saving filter time constant	s	0.50 (Open loop vector control)								
b8-04	Energy-saving coefficient	-	288.20	223.70	169.40	156.80	122.90	94.75	72.69	70.44	63.13
C6-02	Carrier frequency selection*1 *2	kHz	6	6	6	6	6	6	6	6	6
E2-01 (E4-01)	Motor rated current	A	1.90	3.30	6.20	8.50	14.00	19.60	26.60	39.7	53.0
E2-02 (E4-02)	Motor rated slip	Hz	2.90	2.50	2.60	2.90	2.73	1.50	1.30	1.70	1.60
E2-03 (E4-03)	Motor no-load current	A	1.20	1.80	2.80	3.00	4.50	5.10	8.00	11.2	15.2
E2-05 (E4-05)	Motor line-to-line resistance	Ω	9.842	5.156	1.997	1.601	0.771	0.399	0.288	0.230	0.138
E2-06 (E4-06)	Motor leak inductance	%	18.2	13.8	18.5	18.4	19.6	18.2	15.5	19.5	17.2
E2-10	Motor iron loss for torque compensation	W	14	26	53	77	112	172	262	245	272
L2-02	Momentary power loss ride-thru time	s	0.1	0.1	0.2	0.3	0.5	1.0	1.0	1.0	2.0
L2-03	Min. base block (BB) time	s	0.1	0.2	0.3	0.4	0.5	0.6	0.7	0.8	0.9
L2-04	Voltage recovery time	s	0.3	0.3	0.3	0.3	0.3	0.3	0.3	0.3	0.3
L2-08	Frequency reduction gain at KEB start	°C	95	95	95	95	95	95	95	95	95
L8-02	Overheat pre-alarm level	°C	95	95	95	95	95	95	95	95	95

Con-stant Number	Name	Unit	Factory Setting								
-	Inverter Capacity	kW	18.5	22	30	37	45	55	75	90	110
o2-04	kVA selection	-	9	A	B	C	D	E	F	10	11
b8-03	Energy-saving filter time constant	s	0.50 (Open loop vector control)					2.00 (Open loop vector control)			
b8-04	Energy-saving coefficient	-	57.87	51.79	46.27	38.16	35.78	31.35	23.10	23.10	23.10
C6-02	Carrier frequency selection	kHz	6	6	4	4	4	4	4	4	1
E2-01 (E4-01)	Motor rated current	A	65.8	77.2	105.0	131.0	160.0	190.0	260.0	260.0	260.0
E2-02 (E4-02)	Motor rated slip	Hz	1.67	1.70	1.80	1.33	1.60	1.43	1.39	1.39	1.39
E2-03 (E4-03)	Motor no-load current	A	15.7	18.5	21.9	38.2	44.0	45.6	72.0	72.0	72.0
E2-05 (E4-05)	Motor line-to-line resistance	Ω	0.101	0.079	0.064	0.039	0.030	0.022	0.023	0.023	0.023
E2-06 (E4-06)	Motor leak inductance	%	20.1	19.5	20.8	18.8	20.2	20.5	20.0	20.0	20.0
E2-10	Motor iron loss for torque com-pensation	W	505	538	699	823	852	960	1200	1200	1200
L2-02	Momentary power loss ridethru time	s	2.0	2.0	2.0	2.0	2.0	2.0	2.0	2.0	2.0
L2-03	Min. base block (BB) time	s	1.0	1.0	1.1	1.1	1.2	1.2	1.3	1.5	1.7
L2-04	Voltage recovery time	s	0.6	0.6	0.6	0.6	0.6	1.0	1.0	1.0	1.0
L2-08	Frequency reduction gain at KEB start	°C	95	95	95	95	95	95	95	95	95
L8-02	Overheat pre-alarm level	°C	95	95	95	95	95	95	95	95	95

■400 V Class Inverters

Constant Number	Name	Unit	Factory Setting									
-	Inverter Capacity	kW	0.4	0.75	1.5	2.2	3.7	4.0	5.5	7.5	11	15
o2-04	kVA selection	-	20	21	22	23	24	25	26	27	28	29
b8-03	Energy-saving filter time constant	s	0.50 (Open loop vector control)									
b8-04	Energy-saving coefficient	-	576.40	447.40	338.80	313.60	245.80	236.44	189.50	145.38	140.88	126.26
C6-02	Carrier frequency selection	kHz	6	6	6	6	6	6	6	6	6	6
E2-01 (E4-01)	Motor rated current	A	1.00	1.60	3.10	4.20	7.00	7.00	9.80	13.30	19.9	26.5
E2-02 (E4-02)	Motor rated slip	Hz	2.90	2.60	2.50	3.00	2.70	2.70	1.50	1.30	1.70	1.60
E2-03 (E4-03)	Motor no-load current	A	0.60	0.80	1.40	1.50	2.30	2.30	2.60	4.00	5.6	7.6
E2-05 (E4-05)	Motor line-to-line resistance	Ω	38.198	22.459	10.100	6.495	3.333	3.333	1.595	1.152	0.922	0.550
E2-06 (E4-06)	Motor leak inductance	%	18.2	14.3	18.3	18.7	19.3	19.3	18.2	15.5	19.6	17.2
E2-10	Motor iron loss for torque compensation	W	14	26	53	77	130	130	193	263	385	440
L2-02	Momentary power loss ride-thru time	s	0.1	0.1	0.2	0.3	0.5	0.5	0.8	0.8	1.0	2.0
L2-03	Min. base block (BB) time	s	0.1	0.2	0.3	0.4	0.5	0.6	0.6	0.7	0.8	0.9
L2-04	Voltage recovery time	s	0.3	0.3	0.3	0.3	0.3	0.3	0.3	0.3	0.3	0.3
L8-02	Overheat pre-alarm level	°C	95	95	95	95	95	95	95	95	95	95

Con-stant Number	Name	Unit	Factory Setting									
-	Inverter Capacity	kW	18.5	22	30	37	45	55	75	90	110	132
o2-04	kVA selection	-	2A	2B	2C	2D	2E	2F	30	31	32	33
b8-03	Energy-saving filter time constant	s	0.50 (Open loop vector control)					2.00 (Open loop vector control)				
b8-04	Energy-saving coefficient	-	115.74	103.58	92.54	76.32	71.56	67.20	46.20	41.22	36.23	33.18
C6-02	Carrier frequency selection	kHz	6	6	4	4	4	4	4	4	4	4
E2-01 (E4-01)	Motor rated current	A	32.9	38.6	52.3	65.6	79.7	95.0	130.0	156.0	190.0	223.0
E2-02 (E4-02)	Motor rated slip	Hz	1.67	1.70	1.80	1.33	1.60	1.46	1.39	1.40	1.40	1.38
E2-03 (E4-03)	Motor no-load current	A	7.8	9.2	10.9	19.1	22.0	24.0	36.0	40.0	49.0	58.0
E2-05 (E4-05)	Motor line-to-line resis-tance	Ω	0.403	0.316	0.269	0.155	0.122	0.088	0.092	0.056	0.046	0.035
E2-06 (E4-06)	Motor leak inductance	%	20.1	23.5	20.7	18.8	19.9	20.0	20.0	20.0	20.0	20.0
E2-10	Motor iron loss for torque compensation	W	508	586	750	925	1125	1260	1600	1760	2150	2350
L2-02	Momentary power loss ride-thru time	s	2.0	2.0	2.0	2.0	2.0	2.0	2.0	2.0	2.0	2.0
L2-03	Min. baseblock (BB) time	s	1.0	1.0	1.1	1.1	1.2	1.2	1.3	1.5	1.7	1.7
L2-04	Voltage recovery time	s	0.6	0.6	0.6	0.6	0.6	1.0	1.0	1.0	1.0	1.0
L8-02	Overheat pre-alarm level	°C	95	95	95	95	95	100	95	110	110	110

Note Attach a Momentary Power Interruption Compensation Unit if compensation for power interruptions of up to 2.0 seconds is required for 200 V class Inverters with outputs of 0.4 to 11 kW.

* If C6-02 is set to 0, 1, or F and the initial value of C6-03 and C6-04 is 2.0 kHz, the initial settings for C6-02 are as follows: 2: 5.0 kHz, 3: 7.5 kHz, 4: 10 kHz, 5: 12.5 kHz, and 6: 15 kHz. If the carrier frequency is set higher than the factory setting for Inverters with outputs of 7.5 kW or more, the Inverter rated current will need to be reduced.

Con-stant Number	Name	Unit	Factory Setting				
-	Inverter Capacity	kW	160	185	200	220	300
o2-04	kVA selection	-	34	35	3E	36	37
b8-03	Energy-saving filter time constant	s	2.00 (Open loop vector control)				
b8-04	Energy-saving coefficient	-	30.13	30.57	27.13	27.13	21.76
C6-02	Carrier frequency selection *	kHz	4	4	1	1	1
E2-01 (E4-01)	Motor rated current	A	270.0	310.0	370.0	370.0	500.0
E2-02 (E4-02)	Motor rated slip	Hz	1.35	1.30	1.30	1.30	1.25
E2-03 (E4-03)	Motor no-load current	A	70.0	81.0	96.0	96.0	130.0
E2-05 (E4-05)	Motor line-to-line resis-tance	Ω	0.029	0.025	0.020	0.020	0.014
E2-06 (E4-06)	Motor leak inductance	%	20.0	20.0	20.0	20.0	20.0
E2-10	Motor iron loss for torque compensation	W	2850	3200	3700	3700	4700
L2-02	Momentary power loss ride-thru time	s	2.0	2.0	2.0	2.0	2.0
L2-03	Min. base block (BB) time	s	1.8	1.9	2.0	2.0	2.1
L2-04	Voltage recovery time	s	1.0	1.0	1.0	1.0	1.0
L8-02	Overheat pre-alarm level	°C	100	95	95	95	95

Note Attach a Momentary Power Interruption Compensation Unit if compensation for power interruptions of up to 2.0 seconds is required for 200 V class Inverters with outputs of 0.4 to 11 kW.

* If C6-02 is set to 0, 1, or F and the initial value of C6-03 and C6-04 is 2.0 kHz, the initial settings for C6-02 are as follows: 2: 5.0 kHz, 3: 7.5 kHz, 4: 10 kHz, 5: 12.5 kHz, and 6: 15 kHz. If the carrier frequency is set higher than the factory setting for Inverters with outputs of 7.5 kW or more, the Inverter rated current will need to be reduced.

Notes:

6

Constant Settings by Function

Application and Overload Selections

◆ Select the Overload to Suit the Application

Set C6-01 (CT: Low carrier constant torque, VT: High carrier variable torque) depending on the application for which the Inverter is used. The setting ranges for the Inverter carrier frequency, overload tolerance, and maximum output frequency depend on the setting in C6-01. If using the Inverter with C6-01 set to the factory setting (1: CT), use a load application in which load torque reduces with the speed, e.g., fans and pumps.

■Related Constants

No. Constant No.	Name	Details	Setting Range	Factory Setting	Changes During Operation?	Control Methods		
						V/f	V/f with PG	Open Loop vector
C6-01	CT/VT selection	0: CT (low carrier, constant torque, 150% per minute) 1: VT (high carrier, variable torque, 120% per minute)	0 or 1	1	No	Q	Q	Q
C6-02	Carrier frequency selection	Select carrier wave fixed pattern. Select F to enable detailed settings using constants C6-03 to C6-07.	0 to F	6*1	No	Q	Q	Q
C6-03	Carrier frequency upper limit	Set upper and lower carrier frequency limits in kHz. Set the carrier wave gain as shown below. In vector control method, the carrier frequency is fixed according to C6-03 (Carrier Frequency Upper Limit). 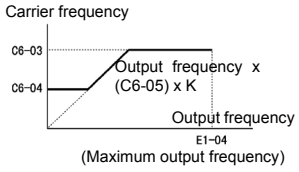 K is the coefficient determined by the set value in C6-03. C6-03 ≥ 10.0 kHz: K = 3 10.0 kHz > C6-03 ≥ 5.0 kHz : K = 2 5.0 kHz > C6-03: K = 2	2.0 to 15.0 *2 *3	15.0 kHz *1	No	A	A	A
C6-04	Carrier frequency lower limit		0.4 to 15.0 *2 *3	15.0 kHz *1	No	A	A	No
C6-05	Carrier frequency proportional gain		00 to 99 *3	00	No	A	A	No

* 1. The factory settings depend on the Inverter capacity.
* 2. The setting ranges depend on the Inverter capacity.
* 3. Can be set and referenced only when C6-01 is set to 1, and C6-02 is set to F.

■Difference Between CT and VT

The characteristics of CT (low carrier, constant torque) and VT (high carrier, variable torque) are shown below.

CT: Low Carrier, Constant Torque	VT: High Carrier, Variable Torque
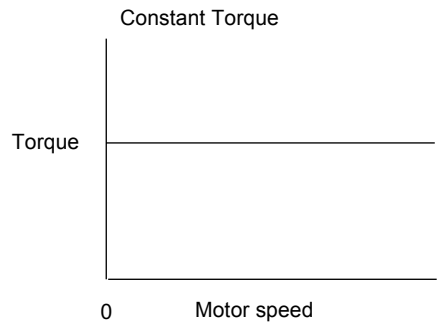	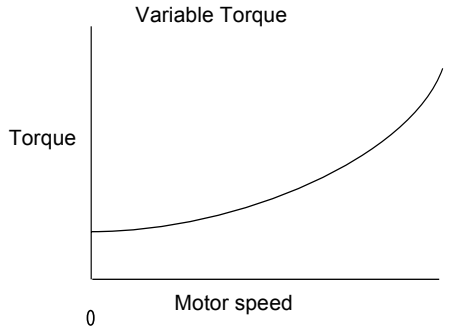
Constant torque means a constant load torque for all motor speed, and it requires overload resistance capability. Applications include pushers, conveyors, cranes, and other friction or heavy loads.	Variable torque means that the load torque will decrease as the speed decreases. Normally, overload resistance capability is not required. Applications include fans and pumps.
Low carrier: Electromagnetic noise is present.	High carrier: Electromagnetic noise is not present.

■Setting Precautions

C6-01 (CT/VT Selection)

When setting C6-01, observe the following precautions.

- Depending on the set value in C6-01, the setting range of the related constants is limited as follows:

C6-01 Set Value	0 (Low Carrier, Constant Torque)	1 (High Carrier, Variable Torque)
Inverter Overload Protection Level	150% Inverter rated current/1 min.	120% Inverter rated current/1 min.
C6-02 (Carrier Frequency Selection)	0: Low carrier, low noise 1: Carrier 2 kHz	0: Low carrier low noise 1: Carrier 2 kHz 2: Carrier 5 kHz 3: Carrier 7.5 kHz 4: Carrier 10.0 kHz 5: Carrier 12.5 kHz 6: Carrier 15 kHz F: User-set*
E1-04 and E3-02 (Max. Output Frequency)	150 Hz	400 Hz
L3-02 (Stall Prevention Level During Acceleration)	150%	120%
L3-06 (Stall Prevention Level During Operation)	150%	120%

* Factory settings depend on Inverter capacity.
200 V and 400 V Class Inverters for 0.4 to 22 kW: 6 (15 kHz)
200 V Class Inverters for 30 to 90 kW, or 400 V Class Inverters for 30 to 185 kW: 4 (10 kHz)
200 V Class Inverter for 110 kW, or 400 V Class Inverters for 220 to 300 kW: 1 (2 kHz)

- When the setting in E1-04 or E3-02 is greater than 150 Hz, if C6-01 is set to 0, an OPE02 (Invalid constant setting range) error will occur.

Carrier Frequency

When selecting the carrier frequency, observe the following precautions items.

- When using a device with C6-01 set to 1 (VT), adjust the carrier frequency according to the cases shown below.
  If the wiring distance between Inverter and motor is long: Set the carrier frequency low. (Use the following values as guidelines.

Wiring Length	50 m or less	100 m or less	Over 100 m
C6-02 (carrier frequency) setting	0 to 6 (15 kHz)	0 to 4 (10 kHz)	0 to 2 (5 kHz)

  If speed and torque are inconsistent at low speeds: Set the carrier frequency low.
  If Inverter noise is affecting peripheral devices: Set the carrier frequency low.
  If leakage current from the Inverter is large: Set the carrier frequency low.
  If metallic noise from the motor is large: Set the carrier frequency high.

- When using V/f control or V/f control with PG, you can vary the carrier frequency to match the output frequency, as shown in the following diagram, by setting C6-03 (Carrier Frequency Upper Limit), C6-04 (Carrier Frequency Lower Limit), and C6-05 (Carrier Frequency Proportional Gain).

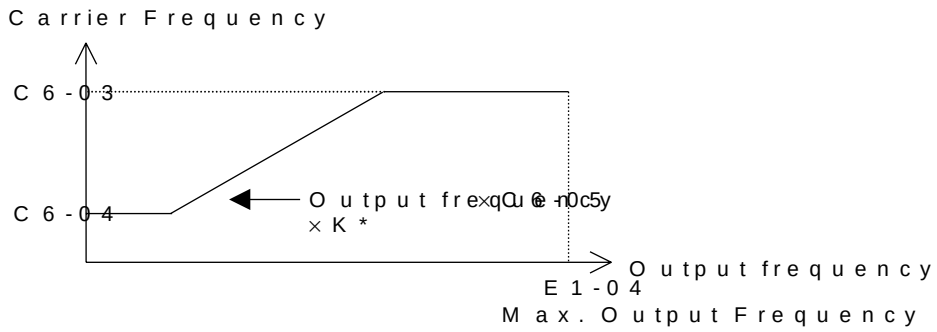

Fig 6.1

*K is the coefficient determined by the set value in C6-03.
C6-03 ≥ 10.0 kHz: K=3
10.0 kHz > C6-03 ≥ 5.0 kHz: K=2
5.0 kHz < C6-03: K=1

- With vector control, the carrier frequency is fixed by the Carrier Frequency Upper Limit in C6-03 if user-set, or by the carrier frequency set in C6-02.
- To fix the carrier frequency, set C6-03 and C6-04 to the same value, or set C6-05 to 0.
- If the settings are as shown below, OPE11 (Data setting error) will occur.

If Carrier Frequency Proportional Gain (C6-05) > 6 and C6-03 < C6-04.

If C6-01 = 0 and Carrier Frequency Selection C6-02 is set from 2 to E.

If C6-01 = 1 and Carrier Frequency Selection C6-02 is set from 7 to E.

■Carrier Frequency and Inverter Overload Current Level

When using a 200 V Class Inverter 30 to 90 kW or a 400 V Class Inverter for 30 to 185 kW with a carrier frequency of 10 kHz or higher and C6-01 is set to 1, the Inverter overload level will be reduced. When the overload current falls to below 120%, OL2 (Inverter overload) will be detected. The Inverter overload current reduction level is shown below.

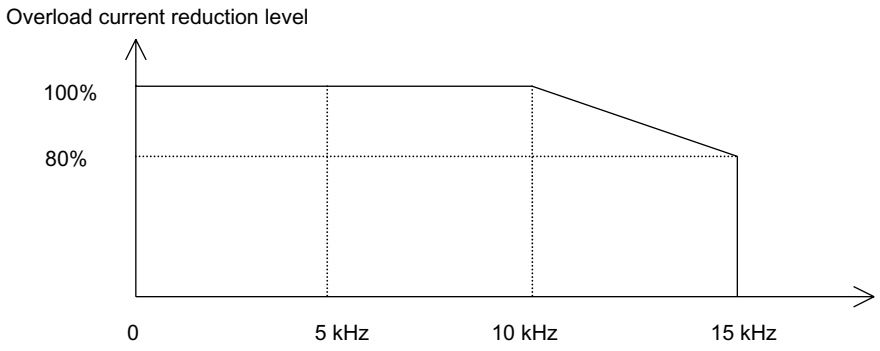

Fig 6.2 Overload Current Reduction Level

Frequency Reference

This section explains how to input the frequency reference.

◆ Selecting the Frequency Reference Source

Set constant b1-01 to select the frequency reference source.

■Related Constants

Constant Number	Name	Description	Setting Range	Factory Setting	Change during Operation	Control Methods		
						V/f	V/f with PG	Open Loop Vector
b1-01	Reference selection	Set the frequency reference source 0: Digital Operator 1: Control circuit terminal (analog input) 2: MEMOBUS communications 3: Option Card 4: Pulse train input	0 to 4	1	No	Q	Q	Q
H6-01	Pulse train input function selection	0: Frequency reference 1: PID feedback value 2: PID target value	0 to 2	0	No	A	A	A
H6-02	Pulse train input scaling	Set the number of pulses taking the reference to be 100%, in Hz.	1000 to 32000	1440 Hz	Yes	A	A	A

■Input the Reference Frequency from the Digital Operator

When b1-01 is set to 0, you can input the reference frequency from the Digital Operator.

Input the reference frequency from the Digital Operator's reference frequency setting display.

For details on setting the reference frequency, refer to *Chapter 3 Digital Operator and Modes*.

Fig 6.3 Frequency Setting Display

■Inputting the Frequency Reference Using Voltage (Analog Setting)

When b1-01 is set to 1, you can input the frequency reference from control circuit terminal A1 (voltage input), or control circuit terminal A2 (voltage or current input).

Inputting Master Speed Frequency Reference Only

If inputting the master speed frequency reference only, input the voltage reference to control circuit terminal A1.

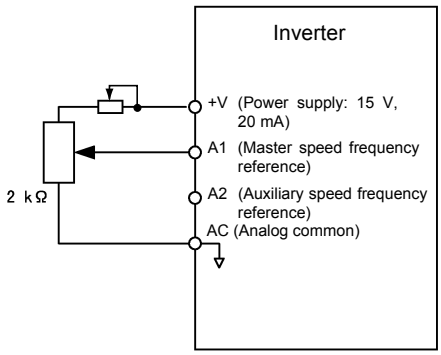

Fig 6.4 Master Speed Frequency Reference Input

2-Step Switching: Master/Auxiliary

If performing 2-step switching between master and auxiliary speed frequencies, input the master speed frequency reference to control circuit terminal A1, and input the auxiliary speed frequency reference to A2.

When terminal S3 (multi-step speed command 1) is OFF, terminal A1 (master speed frequency reference) will be the Inverter frequency reference, and when terminal S3 is ON, terminal A2 (auxiliary speed frequency reference) will be the Inverter frequency reference.

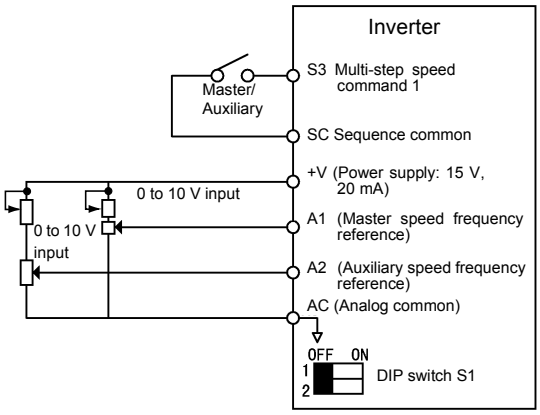

Fig 6.5 Master/Auxiliary Frequency Reference Input

Setting Precautions

When inputting a voltage signal to terminal A2, observe the following precautions.

- Turn OFF pin 2 of DIP switch S1 for switching between voltage and current (factory setting is ON).
- Set H3-08 (Multi-function input terminal A2 signal level selection) to 2.

■Inputting Frequency Reference Using Current

When b1-01 is set to 1, you can input the frequency reference from control circuit terminal A2. Input the current (4 to 20 mA) in control circuit terminal A2.

When H3-09 (Multi-Function Analog Input Terminal A2 Signal Level Selection) is set to 0 (factory setting) the input on A2 is added to A1.

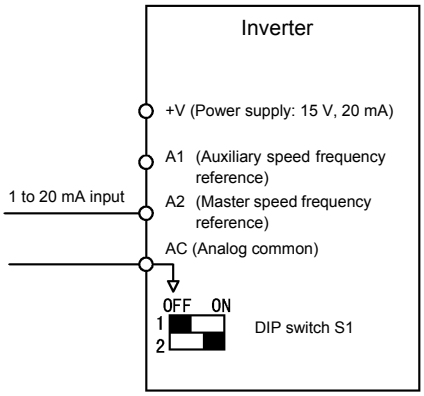

Fig 6.6 Frequency Reference Using Current

Setting Precautions

- When inputting a current signal to terminal A2, turn ON pin 2 of DIP switch S1 (factory setting: ON).
- If using terminal A2 as the master speed reference, set H3-13 (Terminal A1/A2 Switching) to 1, terminal A2 analog input as the master frequency reference, and terminal A1 analog input as auxiliary frequency reference.

■Setting Frequency Reference Using Pulse Train Signals

When b1-01 is set to 4, the pulse train input to control circuit terminal RP is used as the frequency reference.

Set H6-01 (Pulse Train Input Function Selection) to 0 (frequency reference), and then set the 100% reference pulse frequency to H6-02 (Pulse Train Input Scaling).

Pulse Input Specifications	
Low level voltage	0.0 to 0.8 V
High level voltage	3.5 to 13.2 V
Heavy duty	30 to 70%
Pulse frequency	0 to 32 kHz

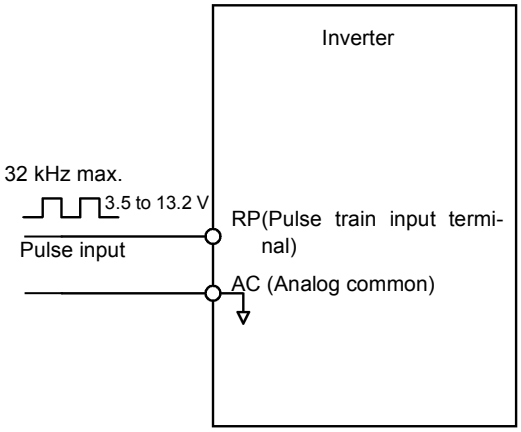

Fig 6.7 Frequency Reference Using Pulse Train Input

◆ Using Multi-Step Speed Operation

With Varispeed-F7 series Inverters, you can change the speed to a maximum of 17 steps using 16 frequency references and one jog frequency reference.

The following example of a multi-function input terminal function shows a 9-step operation using multi-step references 1 to 3 and jog frequency selection functions.

■Related Constants

To switch frequency references, set multi-step references 1 to 3 and the jog reference selection in the multi-function contact inputs.

Multi-function Contact Inputs (H1-01 to H1-05)

Terminal	Constant Number	Set Value	Details
S4	H1-02	3	Multi-step speed command 1 (Also used for master speed/auxiliary speed switching when multi-function analog input H3-09 is set to 2 (auxiliary frequency reference).)
S5	H1-03	4	Multi-step speed command 2
S6	H1-04	5	Multi-step speed command 3
S7	H1-05	6	Jog frequency selection (given priority over multi-step speed command)

Combining Multi-Function References and Multi-Function Contact Inputs

You can change the selected frequency reference by combining the ON/OFF status of S4 to S7 (multi-function contact input terminals) to set multi-step speed commands 1 to 3 and the jog frequency selection. The following table shows the possible combinations.

Speed	TerminalS4	TerminalS5	TerminalS6	TerminalS7	Selected Frequency
	Multi-step Speed Command 1	Multi-step Speed Command 2	Multi-step Speed Command 3	Jog Frequency Selection	
1	OFF	OFF	OFF	OFF	Frequency reference 1 d1-01, master speed frequency
2	ON	OFF	OFF	OFF	Frequency reference 2 d1-02, auxiliary frequency
3	OFF	ON	OFF	OFF	Frequency reference 3 d1-03
4	ON	ON	OFF	OFF	Frequency reference 4 d1-04
5	OFF	OFF	ON	OFF	Frequency reference 5 d1-05
6	ON	OFF	ON	OFF	Frequency reference 6 d1-06
7	OFF	ON	ON	OFF	Frequency reference 7 d1-07
8	ON	ON	ON	OFF	Frequency reference 8 d1-08
9	-	-	-	ON*	Jog frequency d1-17

* Terminal S7's jog frequency selection is given priority over multi-step speed commands.

Setting Precautions

When setting analog inputs to step 1 and step 2, observe the following precautions.

- When setting terminal A1's analog input to step 1, set b1-01 to 1, and when setting d1-01 (Frequency Reference 1) to step 1, set b1-01 to 0.
- When setting terminal A2's analog input to step 2, set H3-09 to 2 (auxiliary frequency reference). When setting d1-02 (Frequency Reference 2) to step 2, set H3-09 to 1F (do not use analog inputs).

■Connection Example and Time Chart

The following diagram shows a time chart and control circuit terminal connection example during a 9-step operation.

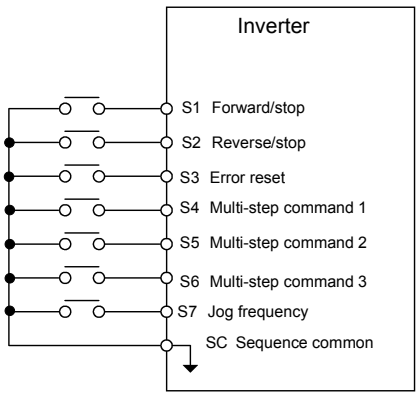

Fig 6.8 Control Circuit Terminal During 9-step Operation

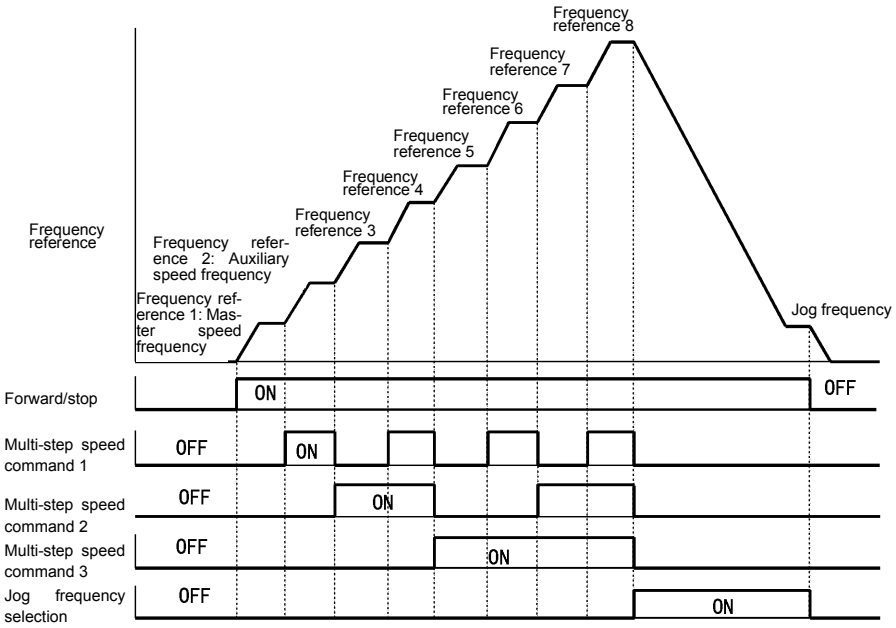

Fig 6.9 Multi-step speed command/Jog Frequency Selection Time Chart

Run Command

This section explains input methods for the run command.

◆ Selecting the Run Command Source

Set constant b1-02 to select the source for the run command.

■Related Constants

Constant Number	Name	Description	Setting Range	Factory Setting	Change during Operation	Control Methods		
						V/f	V/f with PG	Open Loop Vector
b1-02	Operation method selection	Set the run command source. 0: Digital operator 1: Control circuit terminal (sequence input) 2: MEMOBUS communications 3: Option Card	0 to 3	1	No	Q	Q	Q

■Performing Operations Using a Digital Operator

When b1-02 is set to 0, you can perform Inverter operations using the Digital Operator keys (RUN, STOP, JOG, and FWD/REV). For details on the Digital Operator, refer to *Chapter 3 Digital Operator and Modes*.

■Performing Operations Using Control Circuit Terminals

When b1-02 is set to 1, you can perform Inverter operations using the control circuit terminals.

Performing Operations Using a 2-wire Sequence

The factory setting is set to a 2-wire sequence. When control circuit terminal S1 is set to ON, forward operation will be performed, and when S1 is turned OFF, the Inverter will stop. In the same way, when control circuit terminal S2 is set to ON, reverse operation will be performed, and when S2 is turned OFF, the Inverter will stop.

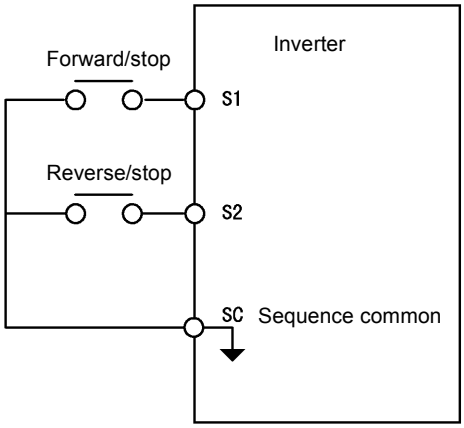

Fig 6.10 2-wire Sequence Wiring Example

Performing Operations Using a 3-wire Sequence

When any constant from H1-01 to H1-05 (multi-function contact input terminals S3 to S7) is set to 0, terminals S1 and S2 are used for a 3-wire sequence, and the multi-function input terminal that has been set functions as a forward/reverse run command terminal.

When the Inverter is initialized for 3-wire sequence control with A1-03, multi-function input 3 becomes the input terminal for the forward/reverse run command.

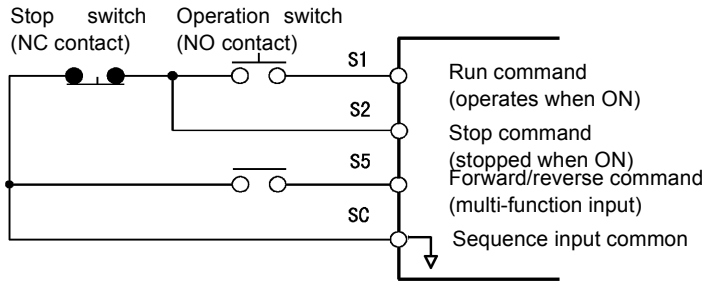

Fig 6.11 3-wire Sequence Wiring Example

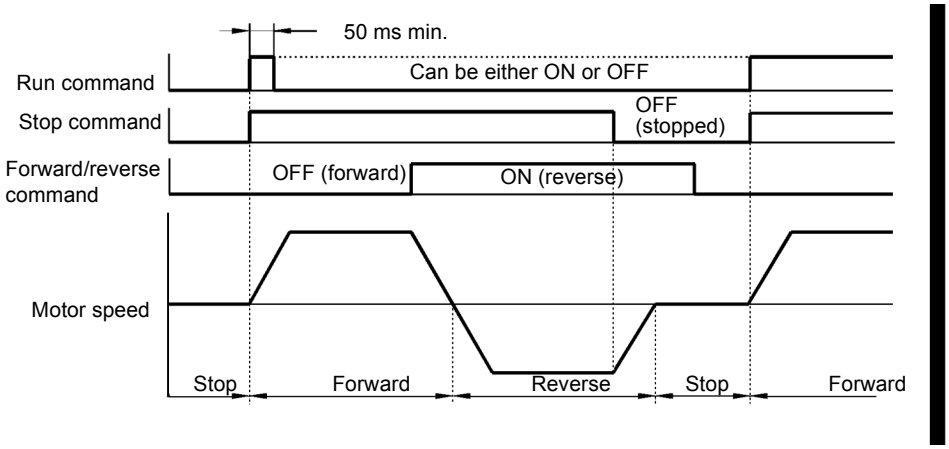

Fig 6.12 Three-wire Sequence Time Chart

INFO

Use a sequence that turns ON terminal S1 for 50 ms or longer for the run command. This will make the run command self-holding in the Inverter.

Stopping Methods

This section explains methods of stopping the Inverter.

◆ Selecting the Stopping Method when a Stop Command is Sent

There are four methods of stopping the Inverter when a stop command is sent:

- Deceleration to stop
- Coast to stop
- DC braking stop
- Coast to stop with timer

Set constant b1-03 to select the Inverter stopping method.

■Related Constants

Constant Number	Name	Description	Setting Range	Factory Setting	Change during Operation	Control Methods		
						V/f	V/f with PG	Open Loop Vector
b1-03	Stopping method selection	Select stopping method when stop command is sent. 0: Deceleration to stop 1: Coast to stop 2: DC braking stop (Stops faster than coast to stop, without regenerative operation.) 3: Coast to stop with timer (Run commands are ignored during deceleration time.)	0 to 3	0	No	Q	Q	Q
b2-01	Zero speed level (DC injection braking starting frequency)	Set the frequency to start the DC injection braking in units of Hz when deceleration to stop is selected. DC injection braking starts from E1-09 when b2-01 < E1-09.	0.0 to 10.0	0.5 Hz	No	A	A	A
b2-02	DC injection braking current	Set the DC injection braking current as a percent, with the Inverter rated current as 100%.	0 to 100	50%	No	A	A	A
b2-04	DC injection braking time at stop	Set the DC injection braking time at stop in seconds. Use when stopping if rotations continue due to momentum. Set to 0.00 to disable DC injection braking time at stop.	0.00 to 10.00	0.50 s	No	A	A	A

■Deceleration to Stop

If the stop command is input (i.e., the run command is turned OFF) when b1-03 is set to 0, the motor decelerates to a stop according to the deceleration time that has been set. (Factory setting: C1-02 (Deceleration Time 1))

If the output frequency when decelerating to a stop falls below b2-01, the DC injection brake will be applied using the DC current set in b2-02 only for the time set in b2-04.

For deceleration time settings, refer to *page 6-21 Setting Acceleration and Deceleration Times*.

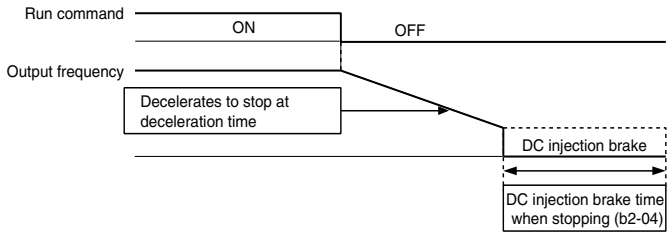

Fig 6.13 Deceleration to Stop

■Coast to Stop

If the stop command is input (i.e., the run command is turned OFF) when b1-03 is set to 1, the Inverter output voltage is interrupted. The motor coasts to a stop at the deceleration rate that counterbalances damage to the machine and inertia including the load.

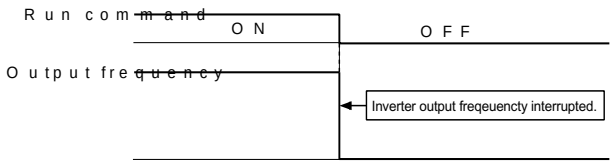

Fig 6.14 Coast to Stop

INFO

After the stop command is input, run commands are ignored until the Minimum Base block Time (L2-03) has elapsed.

■DC Braking Stop

If the stop command is input (i.e., the run command is turned OFF) when b1-03 is set to 2, a wait is made for the time set in L2-03 (Minimum Base block (BB) Time) and then the DC injection brake current set in b2-02 is sent to the motor to apply a DC injection brake to stop the motor. The DC injection brake time is determined by the set value in b2-04 and the output frequency when the stop command is input.

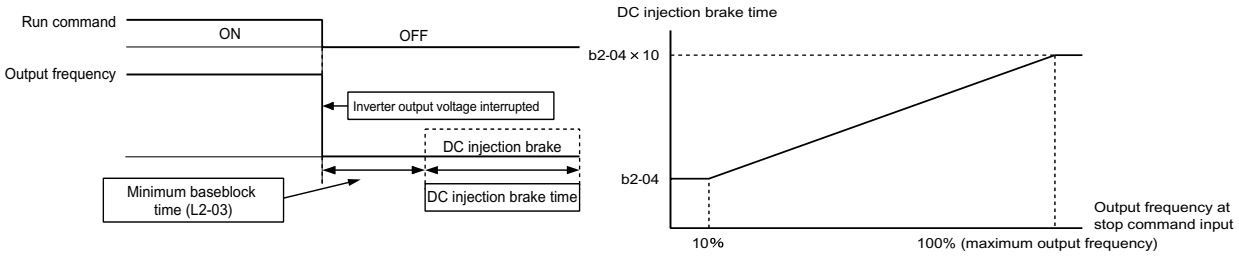

Fig 6.15 DC Injection Braking (DB) Stop

INFO

Lengthen the Minimum Base block Time (L2-03) when an over current (OC) occurs during stopping.

■Coast to Stop with Timer

If the stop command is input (i.e., the run command is turned OFF) when b1-03 is set to 3, the Inverter output is interrupted to coast the motor to a stop. After the stop command is input, run commands are ignored until the time T has elapsed. The time T depends upon the output frequency when the stop command is input and the deceleration time.

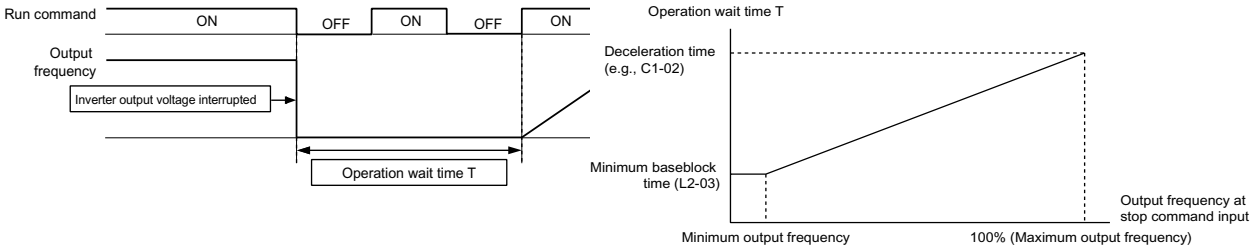

Fig 6.16 Coast to Stop with Timer

◆ Using the DC Injection Brake

Set constant b2-03 to apply the DC injection brake voltage to the motor while it is either coasting to a stop or to stop the motor and before restarting it.

Set b2-03 to 0 to disable the DC injection brake at start.

Set the DC injection brake current using b2-02.

■Related Constants

Constant Number	Name	Description	Setting Range	Factory Setting	Change during Operation	Control Methods		
						V/f	V/f with PG	Open Loop Vector
b2-02	DC injection braking current	Set the DC Injection Braking Current as a percentage of the Inverter rated current.	0 to 100	50%	No	A	A	A
b2-03	DC injection braking time at start	Used to set the time to perform DC injection braking at start in units of 1 second. Used to stop coasting motor and restart it. When the set value is 0, DC injection braking at start is not performed.	0.00 to 10.00	0.00 s	No	A	A	A

■Inputting the DC Injection Brake Command from Control Circuit Terminals

If you set a multi-function contact input terminal (H1-□□) to 60 (DC injection brake command), you can apply the DC injection brake to the motor by turning ON the terminal for which the DC injection brake command has been set when the Inverter is being stopped.

The time chart for the DC injection brake is shown below.

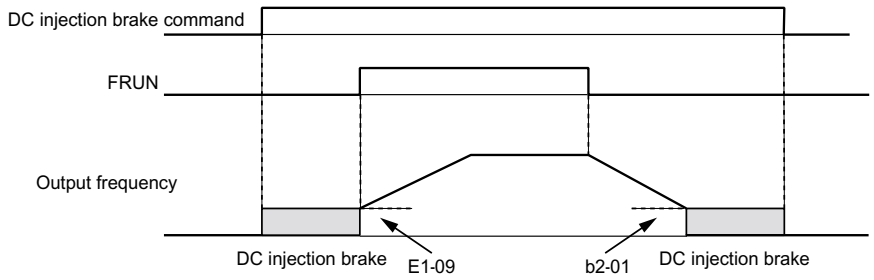

If you input the DC injection brake command from an external terminal, or if the run command and jog command are input, the DC injection brake will be disabled, and operation will resume.

Fig 6.17 DC Injection Brake Time Chart

■Changing the DC Injection Brake Current Using an Analog Input

If you set H3-09 (Multi-function Analog Input Terminal A2 Function Selection) to 6 (DC injection brake current), you can change the DC injection brake current level using the analog input.

At 10 V input (voltage) or 20 mA input (current), 100% of the Inverter rated current will be applied.

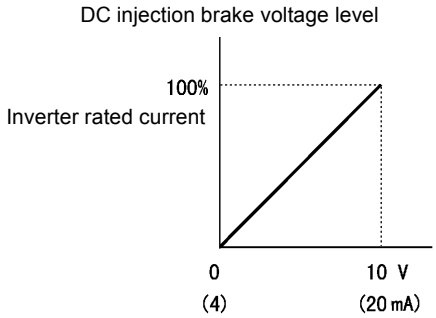

If you set this constant to 7 and use over torque detection in the multi-function output, you can apply the DC injection brake only when over torque detection 1 turns ON.

Fig 6.18 DC Injection Brake Current Using an Analog Input

◆ Using an Emergency Stop

Set a multi-function input terminal (H1-□□) to 15 or 17 (emergency stop) to decelerate to a stop at the deceleration time set in C1-09. If inputting the emergency stop with an NO contact, set the multi-function input terminal (H1-□□) to 15, and if inputting the emergency stop with an NC contact, set the multi-function input terminal (H1-□□) to 17.

After the emergency stop command has been input, operation cannot be restarted until the Inverter has stopped. To cancel the emergency stop, turn OFF the run command and emergency stop command.

■Related parameters

Constant Number	Name	Description	Setting Range	Factory Setting	Change during Operation	Control Methods		
						V/f	V/f with PG	Open Loop Vector
C1-09	Emergency stop time	The deceleration time when the multi-function input "Emergency (fast) stop" is ON. This function can be used a stopping method when a fault has been detected.	0.0 to 6000.0*	10.0 s	No	A	A	A

* The acceleration and deceleration settings range varies depending on the setting in C1-10. When C1-10 is set to 0, the acceleration/deceleration settings range is 0.00 to 600.00 (seconds).

Acceleration and Deceleration Characteristics

This section explains the acceleration and deceleration characteristics of the Inverter.

◆ Setting Acceleration and Deceleration Time

Acceleration time indicates the time taken for the output frequency to climb from 0% to 100%. Deceleration time indicates the time taken for the output frequency to reduce to 0%. The factory setting of the acceleration time is C1-01, and the factory setting of the deceleration time is C1-02.

■Related Parameters

Constant Number	Name	Description	Setting Range	Factory Setting	Change during Operation	Control Methods		
						V/f	V/f with PG	Open Loop Vector
C1-01	Acceleration time 1	Set the acceleration time to accelerate from 0 to the maximum output frequency, in 1-second units.	0.0 to 6000.0*	10.0 s	Yes	Q	Q	Q
C1-02	Deceleration time 1	Set the deceleration time in seconds for the output frequency to fall from 100% to 0%.			Yes	Q	Q	Q
C1-03	Acceleration time 2	Acceleration time when multi-function input "Acceleration/deceleration time selection 1" is ON.			Yes	A	A	A
C1-04	Deceleration time 2	Deceleration time when multi-function input "Acceleration/deceleration time selection 1" is ON.			Yes	A	A	A
C1-05	Acceleration time 3	Acceleration time when multi-function input "Acceleration/deceleration time selection 2" is ON.			No	A	A	A
C1-06	Deceleration time 3	Deceleration time when multi-function input "Acceleration/deceleration time selection 2" is ON.			No	A	A	A
C1-07	Acceleration time 4	Acceleration time when multi-function input "Acceleration/deceleration time selection 1" and "Acceleration/deceleration time selection 2" are ON.			No	A	A	A
C1-08	Deceleration time 4	Deceleration time when multi-function input "Acceleration/deceleration time selection 1" and "Acceleration/deceleration time 2" are ON.			No	A	A	A
C1-10	Acceleration/deceleration time setting unit	0: 0.01 s 1: 0.1 s	0 or 1	1	No	A	A	A
C1-11	Acceleration/deceleration time switching frequency	Set the frequency at which acceleration/deceleration time switches automatically. Less than set frequency: Acceleration/deceleration time 4 Set frequency or above: Acceleration/deceleration time 1 Multi-function inputs "Acceleration/deceleration time selection 1" and "Acceleration/deceleration time selection 2" are given priority.	0.0 to 400.0	0.0 Hz	No	A	A	A

Constant Number	Name	Description	Setting Range	Factory Setting	Change during Operation	Control Methods		
						V/f	V/f with PG	Open Loop Vector
C2-01	S-curve characteristic time at acceleration start	Set the S-curve characteristic time for each part in seconds. When you set the S-curve characteristic time, S-curve characteristic time at start and end during acceleration/deceleration is lengthened by 1/2 only. 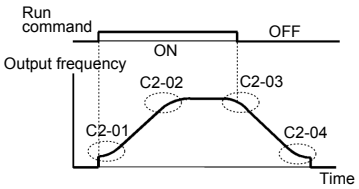 	0.00 to 2.50	0.20 s	No	A	A	A
C2-02	S-curve characteristic time at acceleration end		0.00 to 2.50	0.20 s	No	A	A	A
C2-03	S-curve characteristic time at deceleration start		0.00 to 2.50	0.20 s	No	A	A	A
C2-04	S-curve characteristic time at deceleration end		0.00 to 2.50	0.00 s	No	A	A	A

* The acceleration and deceleration settings range varies depending on the setting in C1-10. When C1-10 is set to 0, the acceleration/deceleration settings range is 0.00 to 600.00 (seconds).

■Setting Acceleration and Deceleration Time Units

Set the acceleration/deceleration time units using C1-10. Constant C1-10 is set to 1 at the factory.

Set value	Details
0	The acceleration/deceleration time settings range is 0.00 to 600.00 in units of 0.01 s.
1	The acceleration/deceleration time settings range is 0.00 to 600.00 in units of 0.1 s.

■Switching Acceleration and Deceleration Time Using Multi-Function Input Terminal Commands

Using the Inverter, you can set four acceleration times and four deceleration times. When the multi-function input terminals (H1-□□) are set to 7 (acceleration/deceleration time selection 1) and 1A (acceleration/deceleration time selection 2), you can switch the acceleration/deceleration time even during operation by combining the ON/OFF status of the terminals.

The following table shows the acceleration/deceleration time switching combinations.

Acceleration/Deceleration Time Selection 1 Terminal	Acceleration/Deceleration Time Selection 2 Terminal	Acceleration Time	Deceleration Time
OFF	OFF	C1-01	C1-02
ON	OFF	C1-03	C1-04
OFF	ON	C1-05	C1-06
ON	ON	C1-07	C1-08

■Switching Acceleration and Deceleration Time Automatically

Use this setting when you want to switch acceleration/deceleration time automatically using the set frequency.

When the output frequency reaches the set value in C1-11, the Inverter switches the acceleration/deceleration time automatically as shown in the following diagram.

Set C1-11 to a value other than 0.0 Hz. If C1-11 is set to 0.0 Hz, the function will be disabled.

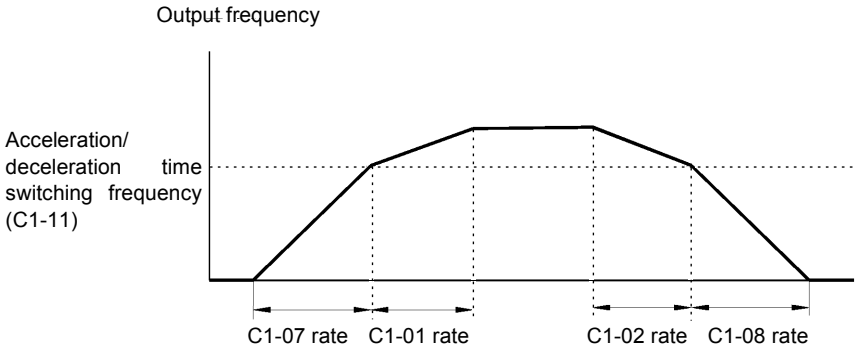

When output frequency ≥ C1-11, acceleration and deceleration are performed using Acceleration/deceleration Time 1 (C1-01, C1-02).

When output frequency < C1-11, acceleration and deceleration are performed using Acceleration/deceleration Time 4 (C1-07, C1-08).

Fig 6.19 Acceleration/deceleration Time Switching Frequency

■Adjusting Acceleration and Deceleration Time Using an Analog Input

If you set H3-09 (Multi-function Analog Input Terminal A2 Function Selection) to 5 (acceleration/deceleration time gain), you can adjust the acceleration/deceleration time using terminal A2's input voltage.

The Inverter's acceleration time when the acceleration time has been set in C1-01 is as follows:

Acceleration time = C1-01 set value x acceleration/deceleration time gain

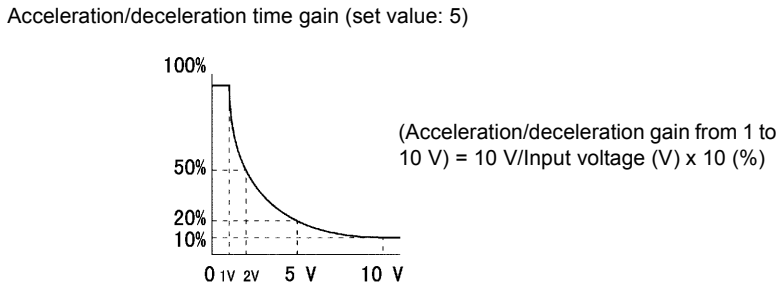

Fig 6.20 Acceleration/Deceleration Time Gain Using an Analog Input

■Entering S-curve Characteristics in the Acceleration and Deceleration Time

By performing acceleration and deceleration using an S-curve pattern, you can reduce shock when starting and stopping the machine.

Using the Inverter, you can set an S-curve characteristic time for each of the following: Acceleration start time, deceleration start time, acceleration end time, and deceleration end time.

INFO

Set the S-curve characteristic time to lengthen acceleration/deceleration time as follows:

Acceleration time = Selected acceleration time + (Acceleration start time S-curve characteristic time + Acceleration end time S-curve characteristic time) / 2

Deceleration time = Selected deceleration time + (Deceleration start time S-curve characteristic time + Deceleration end time S-curve characteristic time) / 2

Setting Example

The S-curve characteristic when switching operation (forward/reverse) is shown in the following diagram.

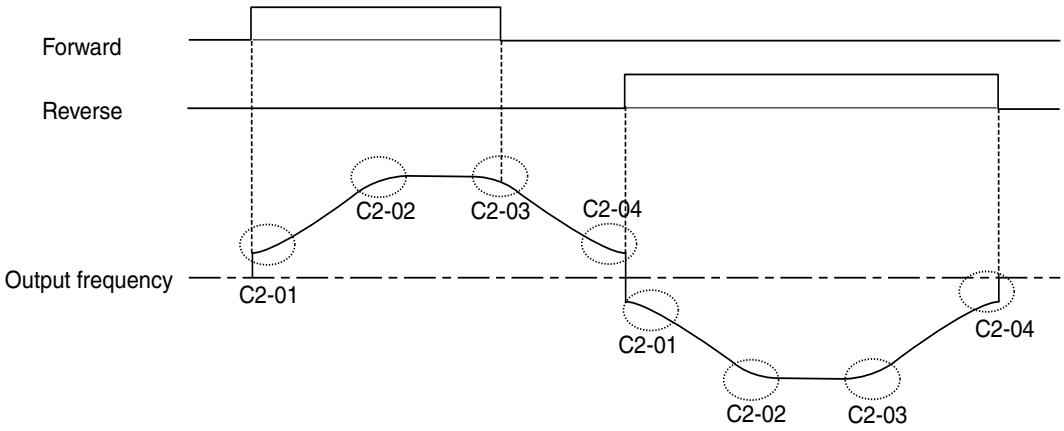

Fig 6.21 S-curve Characteristic during Operation Switching

◆ Accelerating and Decelerating Heavy Loads (Dwell Function)

The dwell function stores the output frequency when starting or stopping heavy loads. By temporarily storing the output frequency, you can prevent the motor from stalling. When using the dwell function, you must select a deceleration stop. Set b1-03 (Stopping Method Selection) to 0.

■Related Parameters

Constant Number	Name	Description	Setting Range	Factory Setting	Change during Operation	Control Methods		
						V/f	V/f with PG	Open Loop Vector
b6-01	Dwell frequency at start	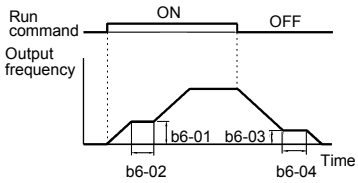 The Dwell function temporarily stores the frequency when starting and stopping heavy loads.	0.0 to 400.0	0.0 Hz	No	A	A	A
b6-02	Dwell time at start		0.0 to 10.0	0.0 s	No	A	A	A
b6-03	frequency at stop		0.0 to 400.0	0.0 Hz	No	A	A	A
b6-04	Dwell time at stop		0.0 to 10.0	0.0 s	No	A	A	A

◆ Preventing the Motor from Stalling During Acceleration (Stall Prevention During Acceleration Function)

The Stall Prevention During Acceleration function prevents the motor from stalling if a heavy load is placed on the motor, or sudden rapid acceleration is performed.

If you set L3-01 to 1 (enabled) and the Inverter output current exceeds the -15% level of the set value in L3-02, the acceleration rate will begin to decrease. When L3-02 is exceeded, acceleration will stop.

If you set L3-01 to 2 (optimum adjustment), the motor current increases to the value set in L3-02. With this setting, the acceleration time setting is ignored.

■Related Parameters

Constant Number	Name	Description	Setting Range	Factory Setting	Change during Operation	Control Methods		
						V/f	V/f with PG	Open Loop Vector
L3-01	Stall prevention selection during acceleration	0: Disabled (Accelerates according to the setting. Motor may stall if the load is too great.) 1: Enabled (Acceleration stops when the level set in L3-02 is exceeded. Acceleration restarts using current value recovery.) 2: Optimum adjustment (Adjusts acceleration using the level set in L3-02 as the standard. The acceleration time setting is ignored.)	0 to 2	1	No	A	A	A
L3-02	Stall prevention level during acceleration	Set as a percent taking the Inverter rated voltage to be 100%. Normally, it is not necessary to change this setting. Lower the set value if the motor stalls using the factory setting.	0 to 200	120%*	No	A	A	A

Constant Number	Name	Description	Setting Range	Factory Setting	Change during Operation	Control Methods		
						V/f	V/f with PG	Open Loop Vector
L3-03	Stall prevention limit during acceleration	If using the motor at a frequency higher than the setting in E1-06, set the lower limit of the stall prevention level during acceleration as a percent, taking the Inverter rated current to be 100%. Normally, it is not necessary to change this setting.	0 to 100	50%	No	A	A	A

* Shows the initial value when C6-01 is set to 1. If C6-01 is set to 0, the initial value is 150%.

■Time Chart

The following figure shows the frequency characteristics when L3-01 is set to 1.

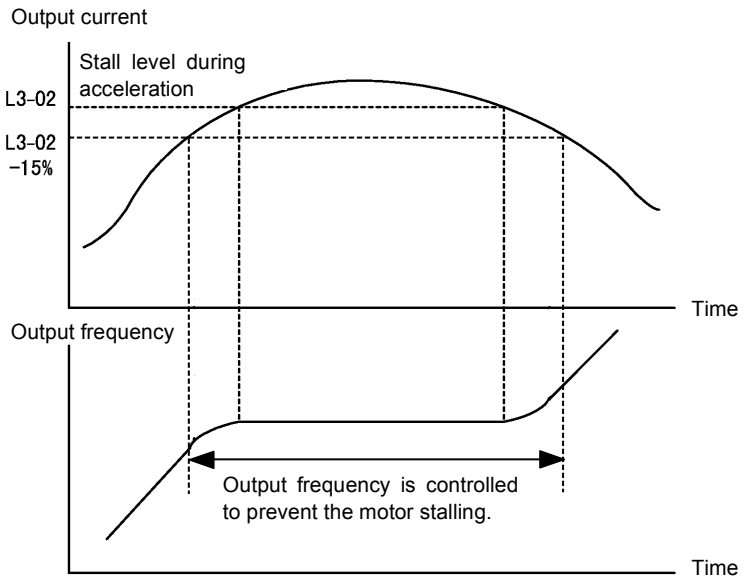

Fig 6.22 Time Chart for Stall Prevention During Acceleration

■Setting Precautions

- If the motor capacity is small compared to the Inverter capacity, or if the motor is operated using the factory settings, resulting in the motor stalling, lower the set value of L3-02.
- If using the motor in the constant output range, L3-02 will be automatically lowered to prevent stalling. L3-03 is the limit value to prevent the stall prevention level in the constant output range from being reduced more than necessary.
- Set the constants as a percent taking the inverter rated voltage to be 100%.

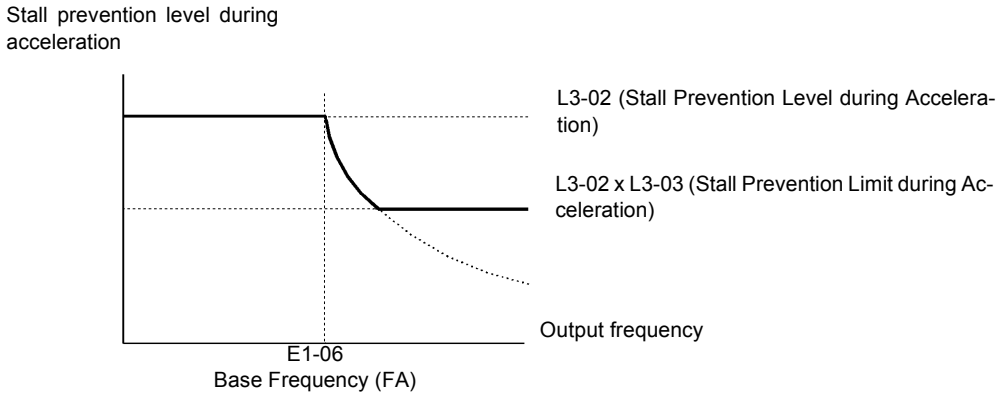

Fig 6.23 Stall Prevention Level and Limit During Acceleration

◆ Preventing Over voltage During Deceleration (Stall Prevention During Deceleration Function)

The Stall Prevention During Deceleration function makes deceleration smoother to suppress increases in DC bus voltage when the DC bus voltage exceeds the set value during motor deceleration.

This function automatically lengthens the deceleration time with respect to the bus voltage, even if the deceleration time has been set to a considerably small value.

If L3-04 is set to 1 or 2, when the main circuit DC voltage approaches the stall prevention level during deceleration, deceleration stops. When deceleration falls below the level, it's restarted. Using this operation, deceleration time is automatically lengthened. If L3-04 is set to 1, deceleration time returns to the set value, and if L3-04 is set to 2, deceleration is automatically adjusted to a faster deceleration time within the range of the stall prevention level during deceleration.

■Related Constants

Constant Number	Name	Description	Setting Range	Factory Setting	Change during Operation	Control Methods		
						V/f	V/f with PG	Open Loop Vector
L3-04	Stall prevention selection during deceleration function selection	0: Disabled (Motor decelerates according to setting. When the deceleration time is short, there is a risk of main circuit overvoltage (OV) occurring.) 1: Enabled (Prevents deceleration when main circuit voltage reaches the overvoltage level. Deceleration restarts after voltage has been restored.) 2: Optimum adjustment (Minimizes deceleration judging from main circuit voltage. The deceleration time setting is ignored.) 3: Enabled (with dynamic braking) If using the dynamic brake option (braking resistor, Braking Resistor Units, and Braking Units), be sure to set constant L3-04 to 0 or 3.	0 to 3	1	No	A	A	A

■Setting Example

An example of stall prevention during deceleration when L3-04 is set to 1 as shown below.

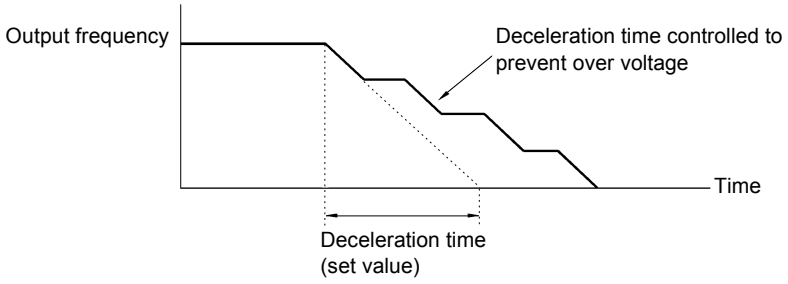

Fig 6.24 Stall Prevention During Deceleration Operation

■Setting Precautions

- The stall prevention level during deceleration differs depending on the Inverter capacity. Refer to the following table for details.

Inverter Capacity		Stall Prevention Level during Deceleration (V)
200 V class		380
400 V class	E1-01 ≥ 400 V	760
	E1-01 < 400 V	660

- When using the braking option (braking resistor, Braking Resistor Units, and Braking Units), be sure to set constant L3-04 to 0 or 3.
- To decelerate at a shorter time than the deceleration time set when L3-04 is set to 0 with the braking option enabled, set L3-04 to 3.

Adjusting Frequency References

This section explains methods of adjusting frequency references.

◆ Adjusting Analog Frequency References

Gain and bias are among the constants used to adjust analog inputs.

■Related Constants

Constant Number	Name	Description	Setting Range	Factory Setting	Change during Operation	Control Methods		
						V/f	V/f with PG	Open Loop Vector
H3-02	Frequency reference (voltage) terminal A1 input gain	Set the frequency during 10 V input as a percent, taking max. output frequency to be 100%.	0.0 to 1000.0	100.0%	Yes	A	A	A
H3-03	Frequency reference (voltage) terminal A1 input bias	Set the frequency during 0 V input as a percent, taking max. output frequency to be 100%.	-100.0 to +100.0	0.0%	Yes	A	A	A
H3-08	Multi-function analog input terminal A2 signal level selection	0: Limit negative frequency settings for gain and bias settings to 0. 1: Do not limit negative frequency settings for gain and bias settings to 0 (i.e., allow reverse operation). 2: 4 to 20 mA (9-bit input). Switch current and voltage input using the switch on the control panel.	0 to 2	2	No	A	A	A
H3-09	Multi-function analog input terminal A2 function selection	Select multi-function analog input function for terminal A2.	0 to 1F	0	No	A	A	A
H3-10	Frequency reference (current) terminal A2 input gain	Set the reference capacity for each function during 10 V (20 mA) input as a percent. Set the 100% content function selected using H3-09 to 100%.	0.0 to 1000.0	100.0%	Yes	A	A	A
H3-11	Frequency reference (current) terminal A2 input bias	Set the reference capacity for each function during 0 V (4 mA) input as a percent. Set the 100% content function selected using H3-09 to 100%.	-100.0 to +100.0	0.0%	Yes	A	A	A

■Adjusting Analog Frequency Reference Using Constants

The frequency reference is input from the control circuit terminals using analog voltage and current.

If using frequency reference terminal A1 as an input terminal, perform adjustments using constants H3-02 and H3-03. If using multi-function analog input terminal A2 as a frequency reference terminal, perform adjustments using H3-10 and H3-11.

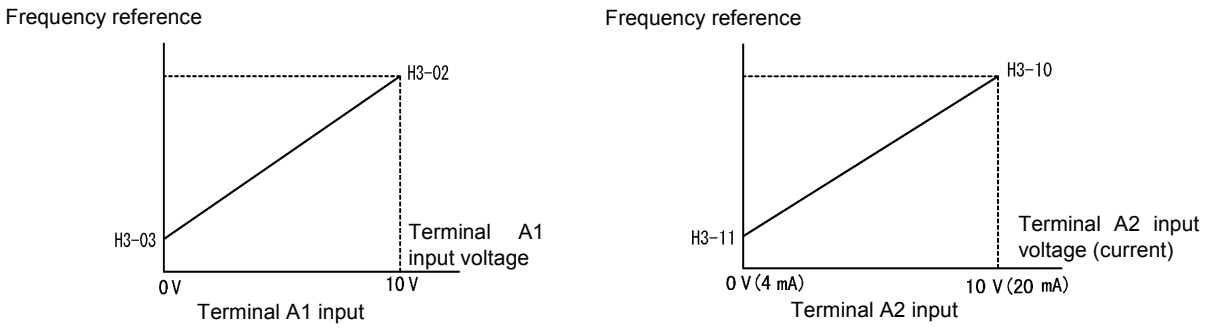

Fig 6.25 Terminals A1 and A2 Inputs

■Adjusting Frequency Gain Using an Analog Input

When H3-09 is set to 1 (frequency gain), you can adjust the frequency gain using an analog input.

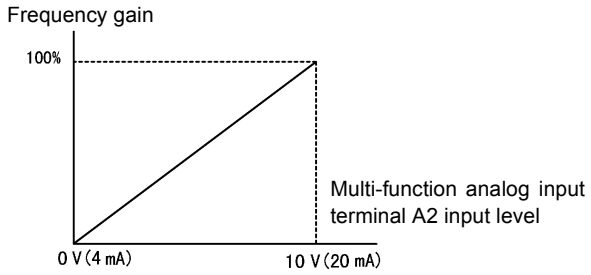

Fig 6.26 Frequency Gain Adjustment (Terminal A2 Input)

The frequency gain for terminal A1 is the sum of H3-02 and terminal A2 gain. For example, when H3-02 is set to 100% and terminal A2 is set to 5 V, the terminal A1 frequency reference will be 50%.

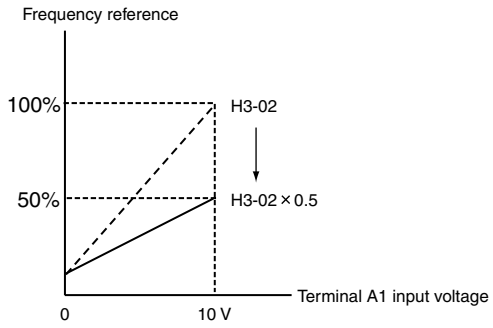

■Adjusting Frequency Bias Using an Analog Input

When constant H3-09 is set to 0 (add to terminal A1), the frequency equivalent to the terminal A2 input voltage is added to A1 as a bias.

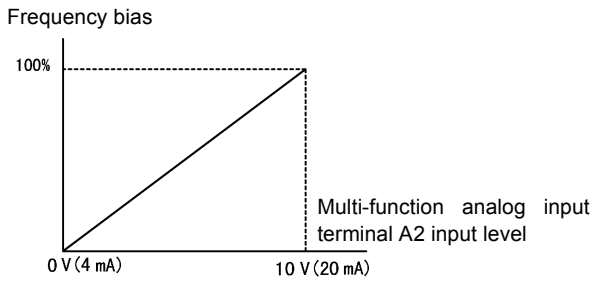

Fig 6.27 Frequency Bias Adjustment (Terminal A2 Input)

For example, if H3-02 is 100%, H3-03 is 0%, and terminal A2 is set to 1 V, the frequency reference from terminal A1 when 0 V is input to A1 will be 10%.

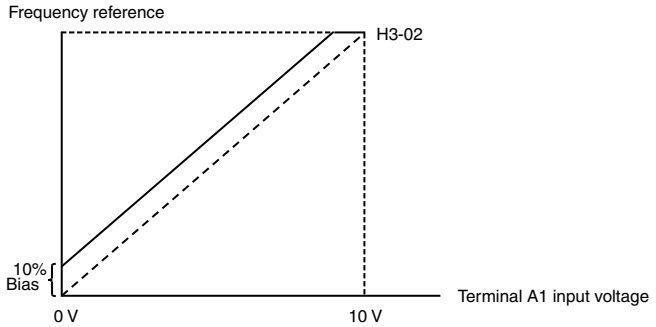

◆ Operation Avoiding Resonance (Jump Frequency Function)

The jump frequency function avoids resonance caused by characteristic frequencies in the machinery due to the motor.

This function is effective in creating a frequency reference dead band.

During constant-speed operation, operation within the jump frequency range is prohibited. Smooth operation still used during acceleration and deceleration, i.e., jumps are not performed.

■Related Constants

Constant Number	Name	Description	Setting Range	Factory Setting	Change during Operation	Control Methods		
						V/f	V/f with PG	Open Loop Vector
d3-01	Jump frequency 1	Set the frequency center value at which to prohibit settings, in hertz. Set to 0.0 to disable the jump frequency. Make sure the settings are as follows: d3-01 ≥ d3-02 ≥ d3-03. Operation within the jump frequency range is prohibited. Changes during acceleration and deceleration are made gradually without performing jumps.	0.0 to 400.0	0.0 Hz	No	A	A	A
d3-02	Jump frequency 2			0.0 Hz	No	A	A	A
d3-03	Jump frequency 3			0.0 Hz	No	A	A	A
d3-04	Jump frequency width	Set the jump frequency width in hertz. The jump frequency range is as follows: (Jump frequency ±d3-04).	0.0 to 20.0	1.0 Hz	No	A	A	A

The relationship between the output frequency and the jump frequency reference is as follows:

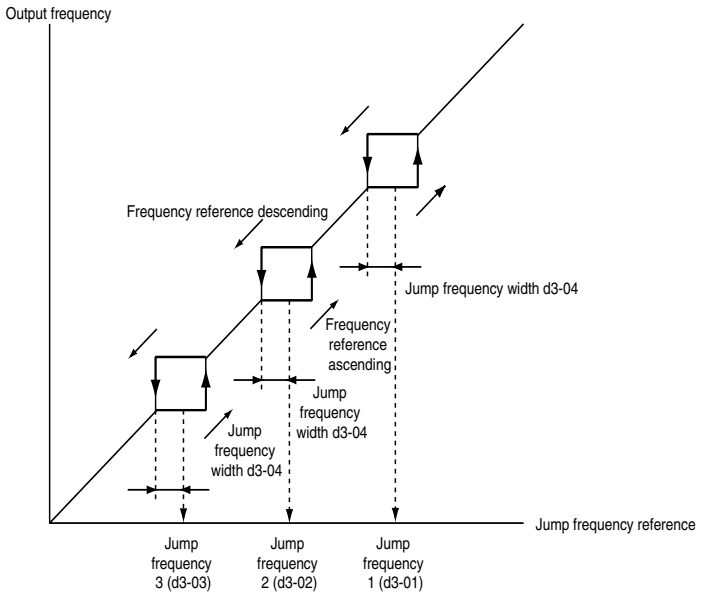

Fig 6.28 Jump Frequency

■Setting Jump Frequency Reference Using an Analog Input

When constant H3-09 (Multi-function Analog Input Terminal A2 Function Selection) is set to A (jump frequency), you can change the jump frequency using the terminal A2 input level.

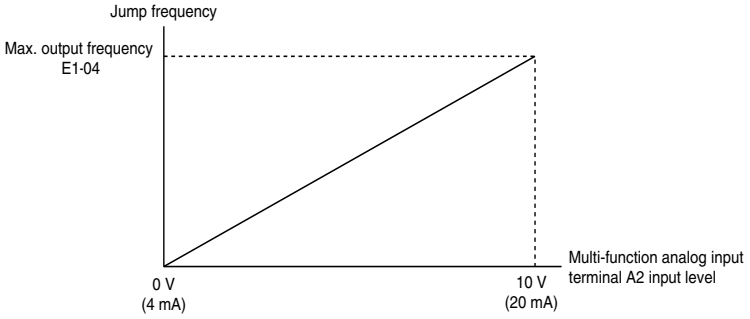

Fig 6.29 Jump Frequency Setting Using an Analog Input

■Setting Precautions

- Set the jump frequency according to the following formula: d3-01 ≥ d3-02 ≥ d3-03 > Analog input.
- When constants d3-01 to d3-03 are set to 0 Hz, the jump frequency function is disabled.

◆ Adjusting Frequency Reference Using Pulse Train Inputs

The frequency reference can be adjusted when b1-01 (Reference Selection) is set to 4 (Pulse Train Input). Set the pulse frequency in constant H6-02 to 100% reference, and then adjust the gain and bias accordingly using H6-03 and H6-04.

■Related Constants

Constant Number	Name	Description	Setting Range	Factory Setting	Change during Operation	Control Methods		
						V/f	V/f with PG	Open Loop Vector
H6-01	Pulse train input function selection	0: Frequency reference 1: PID feedback value 2: PID target value	0 to 2	0	No	A	A	A
H6-02	Pulse train input scaling	Set the number of pulses in Hz, taking the reference to be 100%.	1000 to 32000	1440 Hz	Yes	A	A	A
H6-03	Pulse train input gain	Set the input gain level as a percent when the pulse train set in H6-02 is input.	0.0 to 1000.0	100.0%	Yes	A	A	A
H6-04	Pulse train input bias	Set the input bias when the pulse train is 0.	-100.0 to 100.0	0.0%	Yes	A	A	A
H6-05	Pulse train input filter time	Set the pulse train input primary delay filter time constant in seconds.	0.00 to 2.00	0.10 s	Yes	A	A	A

The following diagram shows the method for adjusting the frequency reference using pulse inputs.

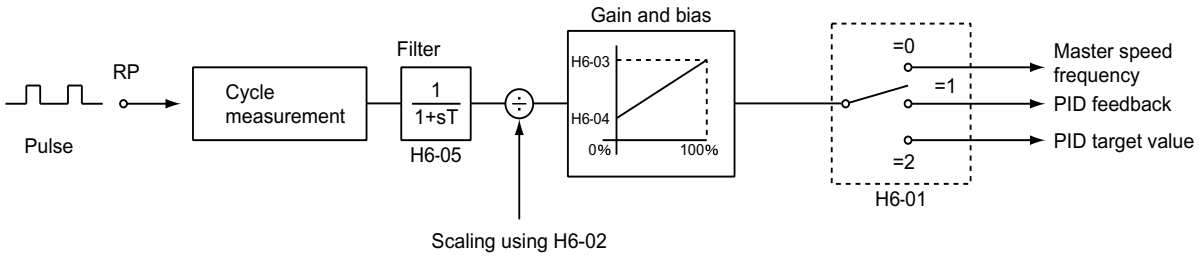

Fig 6.30 Frequency Reference Adjustments Using Pulse Train Inputs

Speed Limit (Frequency Reference Limit Function)

This section explains how to limit the motor speed.

◆ Limiting Maximum Output Frequency

If you do not want the motor to rotate above a given frequency, use constant d2-01.

Set the upper limit value of the Inverter output frequency as a percent, taking E1-04 (Maximum Output Frequency) to be 100%.

■Related Constants

Constant Number	Name	Description	Setting Range	Factory Setting	Change during Operation	Control Methods		
						V/f	V/f with PG	Open Loop Vector
d2-01	Frequency reference upper limit	Set the output frequency upper limit as a percent, taking the max. output frequency to be 100%.	0.0 to 110.0	100.0%	No	A	A	A

◆ Limiting Minimum Frequency

If you do not want the motor to rotate at below a given frequency, use constants d2-02 or d2-03.

There are two methods of limiting the minimum frequency, as follows:

- Adjust the minimum level for all frequencies.
- Adjust the minimum level for the master speed frequency (i.e., the lower levels of the jog frequency, multi-step speed frequency, and auxiliary frequency will not be adjusted).

■Related Constants

Constant Number	Name	Description	Setting Range	Factory Setting	Change during Operation	Control Methods		
						V/f	V/f with PG	Open Loop Vector
d2-02	Frequency reference lower limit	Set the output frequency lower limit as a percent, taking the base reference to be 100%.	0.0 to 110.0	0.0%	No	A	A	A
d2-03	Master speed reference lower limit	Set the master speed reference lower limit as a percent, taking the max. output frequency to be 100%.	0.0 to 110.0	0.0%	No	A	A	A

■Adjusting Frequency Lower Limit Using an Analog Input

If you set constant H3-09 (Multi-function Analog Input Terminal A2 Function Selection) to 9 (output frequency lower level), you can adjust the frequency lower level using the terminal A2 input level.

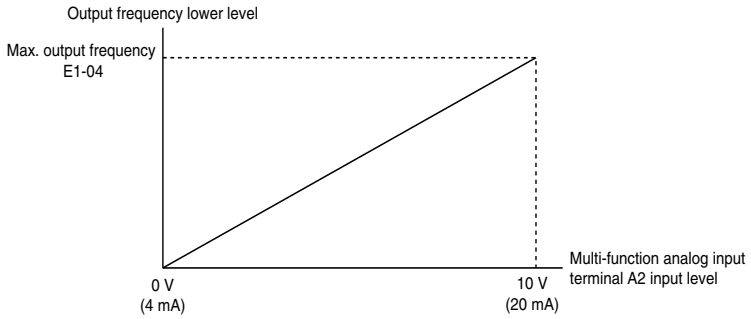

Fig 6.31 Analog Output Characteristics of Output Frequency Lower Level

INFO

If constant d2-02 and terminal A2 output frequency lower limit have been set at the same time, the larger set value will become the frequency lower limit.

Improved Operating Efficiency

This section explains functions for improving motor operating efficiency.

◆ Reducing Motor Speed Fluctuation (Slip Compensation Function)

When the load is large, the amount of motor slip also grows large and the motor speed decreases. The slip compensation function controls the motor at a constant speed, regardless of changes in load. When the motor is operating at the rated load, constant E2-02 (Motor Rated Slip) × the frequency in constant C3-01 is added to the output frequency.

■Related Constants

Constant Number	Name	Description	Setting Range	Factory Setting	Change during Operation	Control Methods		
						V/f	V/f with PG	Open Loop Vector
C3-01	Slip compensation gain	Use this constant to improve speed accuracy when operating under a load. Normally, there is no need to make this setting. Adjust constant C3-01 under the following conditions: • Increase the set value when the speed falls to below the target value. • Decrease the set value when the speed rises to above the target value.	0.0 to 2.5	0.0	Yes	A	No	A
C3-02	Slip compensation primary delay time	Set the primary delay time constant for the slip compensation function in seconds. Normally, there is no need to make this setting. Adjust constant C3-02 under the following conditions: • When the slip compensation response is low, lower the set value. • When the speed is unstable, increase the set value.	0 to 10000	2000 ms *	No	A	No	A
C3-03	Slip compensation limit	Set the upper limit of the compensation amount for the slip compensation function as a percent, taking the motor rated slip amount to be 100%.	0 to 250	200%	No	A	No	A
C3-04	Slip compensation during regeneration	0: Slip compensation is disabled during regeneration. 1: Slip compensation is enabled during regeneration. If the slip compensation function operates during regeneration, you might have to use the braking option (braking resistor, Braking Resistor Unit, or Braking Unit) to momentarily increase the regenerative amount.	0 or 1	0	No	A	No	A
C3-05	Output voltage limit operation selection	0: Disabled. 1: Enabled. (The motor flux will be lowered automatically when the output voltage become saturated.)	0 or 1	0	No	No	No	A

* The factory setting will change when the control method is changed. (V/f control factory settings are given.)

■Adjusting Slip Compensation Gain

You can switch the C3-01 constant settings as shown below by changing the control method.

- V/f control without PG: 0.0
- Open loop vector control: 1.0

Set C3-01 to 1.0 to compensate the rated slip set using the rated torque output status.

Adjust the slip compensation gain using the following procedure.

1. Set E2-02 (Motor Rated Slip) and E2-03 (Motor No-load Current) correctly.
   You can calculate the motor rated slip from the values on the motor nameplate using the following formula.
   Amount of motor rated slip (Hz) = Motor rated frequency (Hz) - No. of rated rotations (r/min.) × No. of motor poles / 120
   Set the values for rated voltage, rated frequency, and no-load current in the motor unladen current. The motor rated slip is set automatically in the vector control using auto tuning.
2. In V/f control, set C3-01 to 1.0. Setting this constant to 0.0 disables slip compensation.
3. Apply a load, and measure the speed to adjust the slip compensation gain. Adjust the slip compensation gain by 0.1 at a time. If the speed is less than the target value, increase the slip compensation gain, and if the speed is greater than the target value, reduce the slip compensation gain.

■Adjusting Slip Compensation Primary Delay Time Constant

Set the slip compensation primary delay time constant in ms.

You can switch the factory settings as follows by changing the control method.

- V/f control without PG: 2000 ms
- Open loop vector control: 200 ms

Normally, there is no need to make these settings. When the slip compensation response is low, lower the set value. When the speed is unstable, increase the set value.

■Adjusting Slip Compensation Limit

Set the upper limit for the slip compensation amount as a percent, taking the motor rated slip amount as 100%.

If the speed is lower than the target value but does not change even when you adjust the slip compensation gain, the motor may have reached the slip compensation limit. Increase the limit, and check the speed again. Make sure that the value of the slip compensation limit and reference frequency does not exceed the tolerance of the machine.

The following diagram shows the slip compensation limit for the constant torque range and fixed output range.

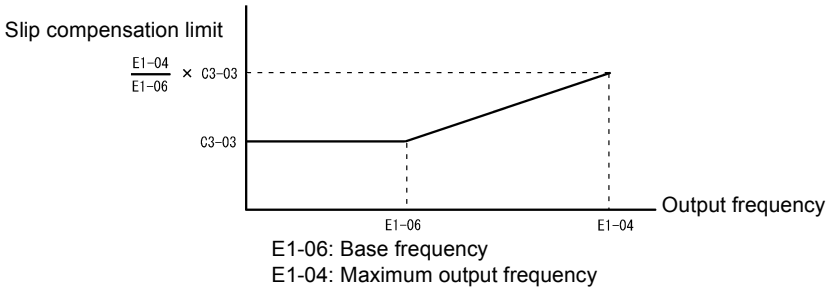

Fig 6.32 Slip Compensation Limit

■Selecting Slip Compensation Function During Regeneration

Set whether to enable or disable the slip compensation function during regeneration.

If the slip compensation function operates during regeneration, you might have to use the braking option (braking resistor, Braking Resistor Unit, and Braking Unit) to momentarily increase the regenerative amount.

■Selecting Output Voltage Limit Operation

If output voltage saturation occurs while the output voltage limit operation is disabled, the output current will not change, but torque control accuracy will be lost. If torque control accuracy is required, change the settings to enable the output voltage limit operation.

If the output voltage limit operation is enabled, motor magnetic flux current is controlled automatically, and torque control accuracy is maintained to limit the output voltage references. Consequently, the output current will increase by approximately 10% maximum (with rated load) compared with when the output voltage limit operation is disabled, so check the Inverter current margin.

Setting Precautions

- If using the device at medium to low speed only, if the power supply voltage is 10% or more higher than the motor rated voltage, or if the torque control accuracy at high speeds is insufficient, it is not necessary to change the output voltage limit operation.
- If the power supply voltage is too low compared to the motor rated voltage, torque control accuracy may be lost even if the output voltage limit operation is enabled.

◆ Compensating for Insufficient Torque at Startup and Low-speed Operation (Torque Compensation)

The torque compensation function detects that the motor load has increased, and increases the output torque.

V/f control calculates and adjusts the motor primary loss voltage according to the output voltage (V), and compensates for insufficient torque at startup and during low-speed operation. Calculate the compensation voltage as follows: Motor primary voltage loss × constant C4-01.

Vector control separates the motor excitation current and the torque current by calculating the motor primary current, and controlling each of the two separately.

Calculate the torque current as follows: Calculated torque reference × C4-01

■Related Constants

Constant Number	Name	Description	Setting Range	Factory Setting	Change during Operation	Control Methods		
						V/f	V/f with PG	Open Loop Vector
C4-01	Torque compensation gain	Set the torque compensation gain using the multiplication factor. Normally, there is no need to set this constant. Adjust the torque compensation gain in the following circumstances. • If the cable is very long, increase the set value. • If the (maximum applicable) motor capacity is smaller than the Inverter capacity, increase the set value. • If the motor is vibrating, reduce the set value. Adjust this constant so that the output current during low-speed rotation does not exceed the Inverter rated output current range.	0.00 to 2.50	1.00	Yes	A	A	A
C4-02	Torque compensation primary delay time constant	Set the primary delay for the torque compensation function in ms. Normally, there is no need to make this setting. Adjust this constant in the following circumstances. • If the motor is vibrating, increase the set value. • If the motor response is low, decrease the set value.	0 to 10000	200 ms *	No	A	A	A

* The factory setting will change when the control method is changed. (V/f control factory settings are given.)

■Adjusting Torque Compensation Gain

Normally, there is no need to make this adjustment. Do not adjust the torque compensation gain when using open loop vector control.

Adjust the torque compensation gain using V/f control in the following circumstances.

- If the cable is very long, increase the set value.
- If the (maximum applicable) motor capacity is smaller than the Inverter capacity, increase the set value.
- If the motor is vibrating, reduce the set value.

Adjust this constant so that the output current during low-speed rotation does not exceed the Inverter rated output current range.

■Adjusting the Torque Compensation Primary Delay Time Constant

Set the torque compensation function primary delay in ms.

You can switch the factory settings as follows by changing the control method settings:

- V/f control without PG: 200 ms
- V/f control with PG: 200 ms
- open loop vector control: 20 ms

Normally, there is no need to make this setting. Adjust the constant as shown below.

- If the motor is vibrating, increase the set value.
- If the motor response is low, decrease the set value.

◆ Hunting-prevention Function

The hunting-prevention function suppresses hunting when the motor is operating with a light load. This function can be used in V/f without PG and V/f with PG.

■Related Constants

Constant Number	Name	Description	Setting Range	Factory Setting	Change during Operation	Control Methods		
						V/f	V/f with PG	Open Loop Vector
N1-01	Hunting-prevention function selection	0: Hunting-prevention function disabled 1: Hunting-prevention function enabled The hunting-prevention function suppresses hunting when the motor is operating with a light load. This function is enabled in V/f control method only. If high response is to be given priority over vibration suppression, disable the hunting-prevention function.	0 or 1	1	No	A	A	No
N1-02	Hunting-prevention gain	Set the hunting-prevention gain multiplication factor. Normally, there is no need to make this setting. Make the adjustments as follows: • If vibration occurs with light load, increase the setting. • If the motor stalls, reduce the setting. If the setting is too large, the voltage will be too suppressed and the motor may stall.	0.00 to 2.50	1.00	No	A	A	No

◆ Stabilizing Speed (Speed Feedback Detection Function)

The speed feedback detection control (AFR) function measures the stability of the speed when a load is suddenly applied, by calculating the amount of fluctuation of the torque current feedback value, and compensating the output frequency with the amount of fluctuation.

■Related Constants

Constant Number	Name	Description	Setting Range	Factory Setting	Change during Operation	Control Methods		
						V/f	V/f with PG	Open Loop Vector
N2-01	Speed feedback detection control (AFR) gain	Set the internal speed feedback detection control gain using the multiplication function. Normally, there is no need to make this setting. Adjust this constant as follows: • If hunting occurs, increase the set value. • If response is low, decrease the set value. Adjust the setting by 0.05 at a time, while checking the response.	0.00 to 10.00	1.00	No	No	No	A
N2-02	Speed feedback detection control (AFR) time constant	Set the time constant to decide the rate of change in the speed feedback detection control.	0 to 2000	50 ms	No	No	No	A
N2-03	Speed feedback detection control (AFR) time constant 2	Set the time constant to decide the amount of change in the speed.	0 to 2000	750 ms	No	No	No	A

Machine Protection

This section explains functions for protecting the machine.

◆ Limiting Motor Torque (Torque Limit Function)

The motor torque limit function is enabled only with open-loop torque control.

In the open loop vector control method, the user-set value is applied to the torque limit by calculating internally the torque output by the motor. Enable this function if you do not want a torque above a specified amount to be applied to the load, or if you do not want a regeneration value above a specified amount to occur.

■Related Constants

Constant Number	Name	Description	Setting Range	Factory Setting	Change during Operation	Control Methods		
						V/f	V/f with PG	Open Loop Vector
L7-01	Forward drive torque limit	Set the torque limit value as a percent of the motor rated torque. You can set up to four separate limits.	0 to 300	200%	No	No	No	A
L7-02	Reverse drive torque limit		0 to 300	200%	No	No	No	A
L7-03	Forward regenerative torque limit	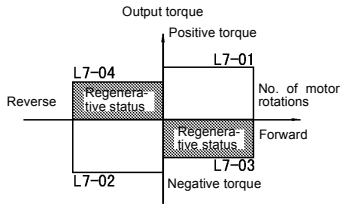	0 to 300	200%	No	No	No	A
L7-04	Reverse regenerative torque limit		0 to 300	200%	No	No	No	A

Multi-function Analog Input (H3-09)

Set Value	Function	100% of Contents	Control Methods		
			V/f	V/f with PG	Open Loop Vector
10	Positive torque limit	Motor rated torque	No	No	Yes
11	Negative torque limit	Motor rated torque	No	No	Yes
12	Regenerative torque limit	Motor rated torque	No	No	Yes
15	Positive/negative torque limit	Motor rated torque	No	No	Yes

Note The forward torque limit is the limit value when the analog input signal generates forward torque. This torque limit setting is enabled even when the analog input signal generates forward torque while the motor is operating (regeneration).

■Setting the Torque Limit in Constants

Using L7-01 to L7-04, you can set individually four torque limits in the following directions: Forward drive, reverse drive, forward regeneration, and reverse regeneration.

■Set the Torque Limit Value Using an Analog Input

You can change the analog input level torque limit value by setting the torque limit in multi-function analog input terminal A2.

The analog input terminal signal level is factory-set as follows:

Multi-function analog input terminal A2: 4 to 20 mA (20 mA at input, torque limited to 100% motor rated torque). The following diagram shows the relationship between the torque limits.

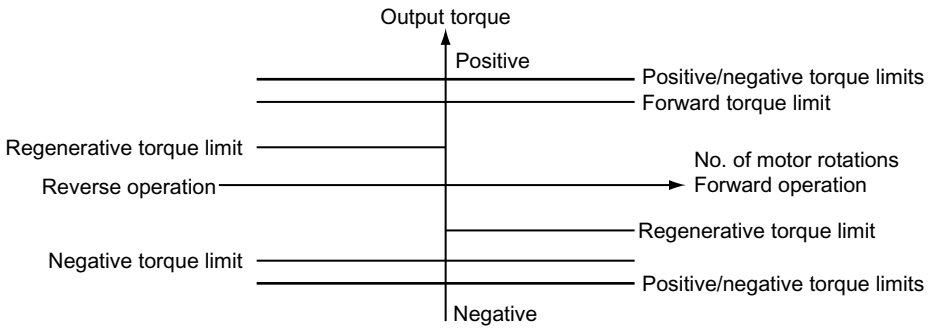

Fig 6.33 Torque Limit by Analog Input

■Setting Torque Limits Using Constants and an Analog Input

The following block diagram shows the relationship between torque limit using constants and torque limit using an analog input.

The lowest torque limit set from among the following is enabled: Torque limit using constants, torque limit using an analog input, 150% of Inverter rating (when set to CT), or 120% of Inverter rating (when set to VT) set in C6-01.

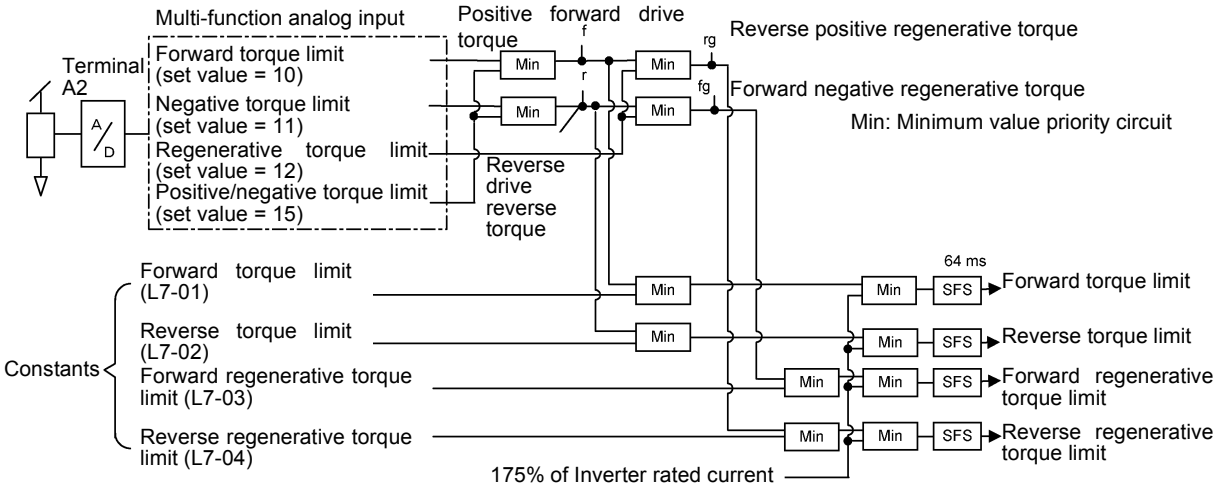

Fig 6.34 Torque Limit Using Constants and an Analog Input

■Setting Precautions

- When the torque limit function is operating, control and compensation of the motor speed is disabled because torque control is given priority.
- When using the torque limit to raise and lower loads, do not carelessly lower the torque limit value, as this may result in the motor falling or slipping.
- Torque limits using an analog input are the upper limit value (during 10 V or 20 mA input) of 100% of the motor rated torque. To make the torque limit value during 10 V or 20 mA input 150% of the rated torque, set the input terminal gain to 150.0 (%). Adjust the gain for multi-function analog input terminal A2 using H3-10.
- The torque limit accuracy is ±5% at the output frequency of 10 Hz or above. When output frequency is less than 10 Hz, accuracy is lowered.

◆ Preventing Motor Stalling During Operation

Stall prevention during operation prevents the motor from stalling by automatically lowering the Inverter's output frequency when a transient overload occurs while the motor is operating at a constant speed.

Stall prevention during operation is enabled only during V/f control. If the Inverter output current continues to exceed the setting in constant L3-06 for 100 ms or longer, the motor speed is reduced. Set whether to enable or disable deceleration time using constant L3-05. Set the deceleration time using C1-02 (Acceleration time 1) or C1-04 (Acceleration Time 2).

If the Inverter output current reaches the set value in L3-06 - 2% (Inverter Rated Output Current), the motor will accelerate again at the frequency set or the acceleration time set.

■Related Constants

Constant Number	Name	Description	Setting Range	Factory Setting	Change during Operation	Control Methods		
						V/f	V/f with PG	Open Loop Vector
L3-05	Stall prevention selection during running function selection	0: Disabled (Operates according to the setting. Motor may stall when the load is large.) 1: Enabled--Deceleration time 1 (Stall prevention function during operation deceleration time is set in C1-02.) 2: Enabled--Deceleration time 2 (Stall prevention function during operation deceleration time is set in C1-04.)	0 to 2	1	No	A	A	No
L3-06	Stall prevention level during running	Enabled when L3-05 is set to 1 or 2. Set as a percent, taking Inverter rated current to be 100%. Normally, there is no need to make this setting. Lower the set value if the motor stalls at the factory setting.	30 to 200	120% *	No	A	A	No

* The initial value when C6-01 is set to 1 is given. If C6-01 is set to 0, the initial value will be 150%.

◆ Changing Stall Prevention Level during Operation Using an Analog Input

If you set H3-09 (Multi-function Analog Input Terminal A2 Function Selection) to 8 (stall prevention during operation level), you can change the stall level during operation by setting H3-10 (Gain (Terminal A2)) and H3-11 (Bias (Terminal A2)).

The stall prevention level during operation enabled is the multi-function analog input terminal A2 input level or the set value in constant L3-06, whichever is the smaller.

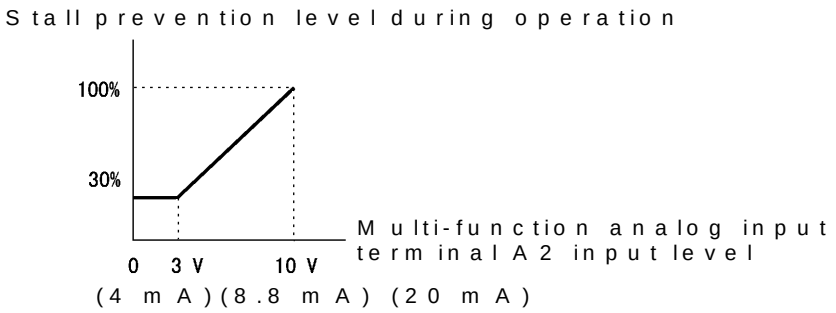

Fig 6.35 Stall Prevention Level during Operation Using an Analog Input

INFO

If the motor capacity is smaller than the Inverter capacity or the motor stalls when operating at the factory settings, lower the stall prevention level during operation.

◆ Detecting Motor Torque

If an excessive load is placed on the machinery (over torque) or the load is suddenly lightened (under torque), you can output an alarm signal to multi-function output terminal M1-M2, P1-PC, or P2-PC.

To use the over torque/under torque detection function, set B, 17, 18, 19 (over torque/under torque detection NO/NC) in one of the following constants: H2-01 to H2-03 (multi-function output terminals M1-M2, P1-PC, and P2-PC function selection).

The over torque/under torque detection level is the current level (Inverter rated output current 100%) in V/f control, and the motor torque (motor rated torque 100%) in vector control.

■Related Constants

Constant Number	Name	Description	Setting Range	Factory Setting	Change during Operation	Control Methods		
						V/f	V/f with PG	Open Loop Vector
L6-01	Torque detection selection 1	0: Over torque/under torque detection disabled. 1: Over torque detection only with speed agreement; operation continues after over torque (warning). 2: Over torque detected continuously during operation; operation continues after over torque (warning). 3: Over torque detection only with speed agreement; output stopped upon detection (protected operation). 4: Over torque detected continuously during operation; output stopped upon detection (protected operation). 5: Under torque detection only with speed agreement; operation continues after over torque (warning). 6: Under torque detected continuously during operation; operation continues after over torque (warning). 7: Under torque detection only with speed agreement; output stopped upon detection (protected operation). 8: Under torque detected continuously during operation; output stopped upon detection (protected operation).	0 to 8	0	No	A	A	A
L6-02	Torque detection level 1	Open-loop vector control: Motor rated torque is set as 100%. V/f control: Inverter rated current is set as 100%.	0 to 300	150%	No	A	A	A
L6-03	Torque detection time 1	Set the over torque/under torque detection time in 1-second units.	0.0 to 10.0	0.1 s	No	A	A	A
L6-04	Torque detection selection 2	Output of torque detection 1 is enabled by setting 17 for H2-□□ and output of torque detection 1 is enabled by setting 18 or 18 for H2-□□.	0 to 4	0	No	A	A	A
L6-05	Torque detection level 2		0 to 300	150%	No	A	A	A
L6-06	Torque detection time 2		0.0 to 10.0	0.1 s	No	A	A	A

Multi-function Output (H2-01 to H2-03)

Set Value	Function	Control Methods		
		V/f	V/f with PG	Open Loop Vector
B	Over torque/under torque detection 1 NO (NO contact: Over torque detection and under torque detection enabled when contact is ON)	Yes	Yes	Yes
17	Over torque/under torque detection 1 NC (NC contact: Over torque detection and under torque detection enabled when contact is OFF)	Yes	Yes	Yes
18	Over torque/under torque detection 2 NO (NO contact: Over torque detection and under torque detection enabled when contact is ON)	Yes	Yes	Yes
19	Over torque/under torque detection 2 NC (NC contact: Over torque detection and under torque detection enabled when contact is OFF)	Yes	Yes	Yes

■L6-01 and L6-04 Set Values and LED Indicators

The relationship between alarms displayed by the Digital Operator when over torque or under torque is detected, and the set values in L6-01 and L6-04, is shown in the following table.

Set Value	Function	LED Indicator	
		Over torque/ Under torque Detection 1	Over torque/ Under torque Detection 2
0	Over torque/under torque detection disabled.	-	-
1	Over torque detection only with speed matching; operation continues after over torque (warning).	OL3 flashes	OL4 flashes
2	Over torque detected continuously during operation; operation continues after over torque (warning).	OL3 flashes	OL4 flashes
3	Over torque detection only with speed matching; output stopped upon detection (protected operation).	OL3 lit	OL4 lit
4	Over torque detected continuously during operation; output stopped upon detection (protected operation).	OL3 lit	OL4 lit
5	Under torque detection only with speed matching; operation continues after over torque (warning).	UL3 flashes	UL4 flashes
6	Under torque detected continuously during operation; operation continues after over torque (warning).	UL3 flashes	UL4 flashes
7	Under torque detection only with speed matching; output stopped upon detection (protected operation).	UL3 lit	UL4 lit
8	Under torque detected continuously during operation; output stopped upon detection (protected operation).	UL3 lit	UL4 lit

■Setting Example

The following diagram shows the time chart for over torque and under torque detection.

- Over torque Detection

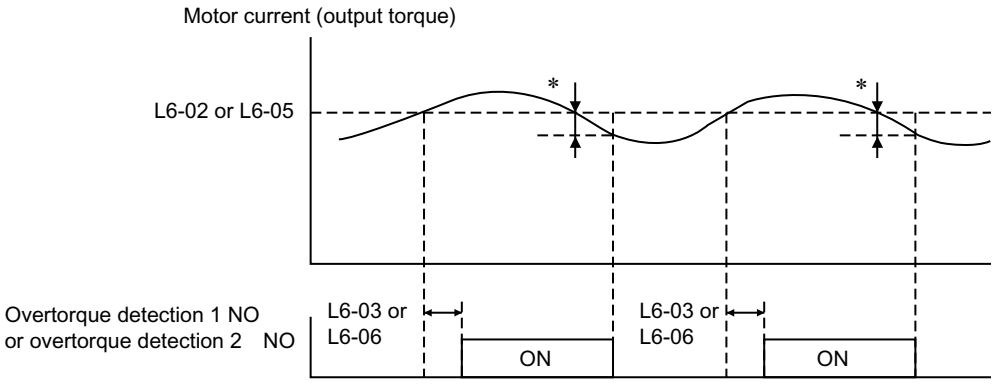

* Overtorque detection disabled band is approximately 10% of the Inverter rated output current (or motor rated torque).

- Under torque Detection

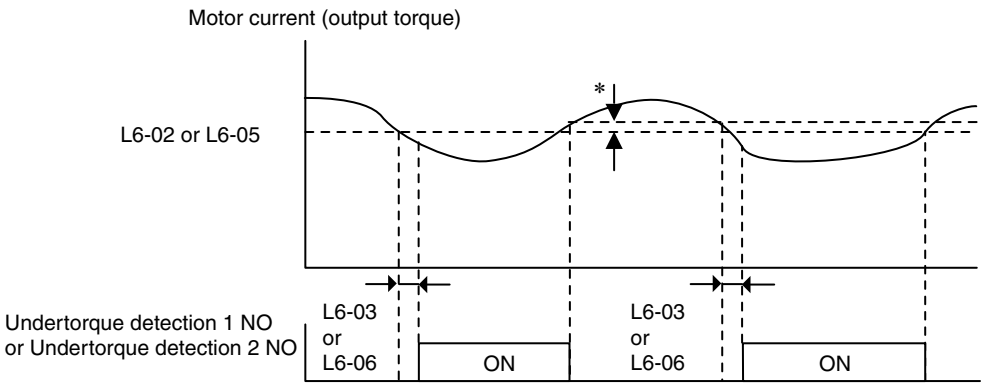

∗ The undertorque detection disabled margin is approximately 10% of the Inverter rated output current (or motor rated torque)

◆ Changing Over torque and Under torque Detection Levels Using an Analog Input

If you set constant H3-09 (Multi-function Analog Input Terminal A2 Function Selection) to 7 (over torque/under torque detection level), you can change the over torque/under torque detection level.

If you change the over torque/under torque detection level using the multi-function analog input, only over torque/under torque detection level 1 will be enabled.

The following diagram shows the over torque/under torque detection level using an analog input.

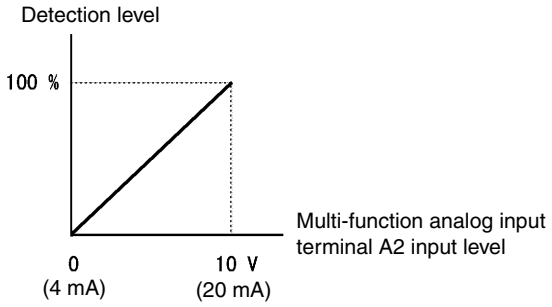

Fig 6.36 Over torque/Under torque Detection Level Using an Analog Input

Multi-Function Analog Input (H3-09)

Set Value	Function	Content at 100%	Control Methods		
			V/f	V/f with PG	Open loop Vec-tor
7	Over torque/Under torque Detection Level	Motor rated torque (vector control), Inverter rated current (V/f con-trol)	Yes	Yes	Yes

◆ Motor Overload Protection

You can protect the motor from overload using the Inverter's built-in electronic thermal overload relay.

■Related Constants

Constant Number	Name	Description	Setting Range	Factory Setting	Change during Operation	Control Methods		
						V/f	V/f with PG	Open Loop Vector
E2-01	Motor rated current	Set the motor rated current in amps. This set value becomes the base value for motor protection, torque limit, and torque control. It is set automatically when using auto tuning.	0.32 to 6.40 *2	1.90 A *1	No	Q	Q	Q
E4-01	Motor 2 rated current	Set the motor rated current in Amps. This set value becomes the base value for motor protection, torque limit, and torque control. It is set automatically when using auto tuning.	0.32 to 6.40 *2	1.90 A *1	No	A	A	A
L1-01	Motor protection selection	Set to enable or disable the motor overload protection function using the electronic thermal relay. 0: Disabled 1: General motor protection 2: Inverter special motor protection 3: With applications where the power supply is often turned ON and OFF, there is a risk that the circuit cannot be protected even if this constant has been set to 1, as the thermal value will be reset. If multiple motors are connected to one Inverter, set this constant to 0, and install a thermal relay in each motor.	0 to 3	1	No	Q	Q	Q
L1-02	Motor protection time constant	Set the electronic thermal detection time in minutes. Normally, there is no need to make this setting. The factory setting is resistance at 150% for 1 min. If the motor overload resistance is clear, set the overload resistance protection time during hot start to suit the motor.	0.1 to 5.0	1.0 min	No	A	A	A

* 1. Factory settings depend on Inverter capacity. (The values shown are for a 200 V Class Inverter for 0.4 kW.)
* 2. The settings range is 10% to 200% of the Inverter rated output current. (The values shown are for a 200 V Class Inverter for 0.4 kW.)

Multi-Function Outputs (H2-01 to H2-03)

Set Value	Function	Control Methods		
		V/f	V/f with PG	Open Loop Vector
1F	Motor overload (OL1, including OH3) pre-alarm (ON: 90% or more of the detection level)	Yes	Yes	Yes

■Setting Motor Rated Current

Set the rated current value on the motor nameplate in constants E2-01 (for motor 1) and E4-01 (for motor 2). This set value is the electronic thermal base current.

■Setting Motor Overload Protection Characteristics

Set the overload protection function in L1-01 according to the applicable motor.

The induction motor's cooling abilities differ according to the speed control range. Consequently, you must select the electronic thermal protection characteristics to match the applicable motor's tolerance load characteristics.

The following table shows the motor type and tolerance load characteristics.

L1-01 Set Value	Motor Type	Tolerance Load Characteristics	Cooling Ability	Electronic Thermal Operation (at 100% Motor Load)
1	General-purpose motor (standard motor)	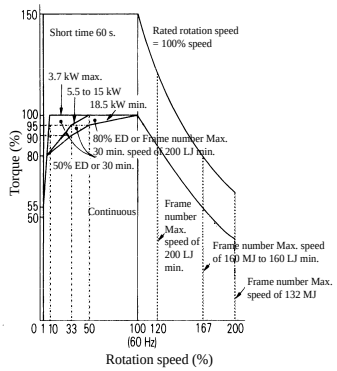	Use this motor for operations using a commercial power supply. This motor construction yields best cooling effect when operating at 50/60 Hz.	When operating continuously at 50/60 Hz or less, motor overload detection (OL1) is detected. The Inverter outputs the error contact, and the motor coasts to a stop.
2	Inverter motor (constant torque) (1:10)	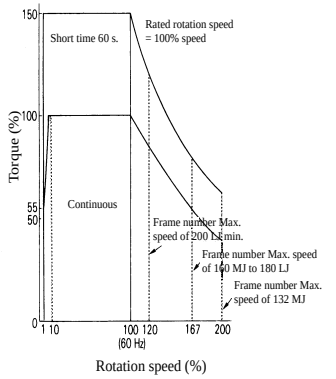	This motor yields a cooling effect even when operating at low speeds (approx. 6 Hz).	Operates continuously at 6 to 50/60 Hz.

L1-01 Set Value	Motor Type	Tolerance Load Characteristics	Cooling Ability	Electronic Thermal Operation (at 100% Motor Load)
3	Vector motor (1:100)	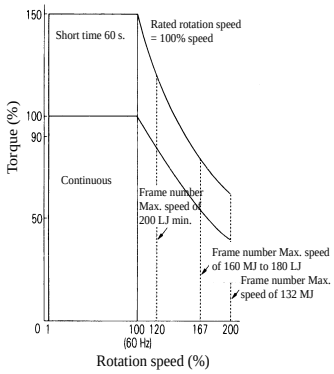	This motor yields a cooling effect even when operating at extremely low speeds (approx. 0.6 Hz).	Operates continuously at 0.6 to 60 Hz.

■Setting Motor Protection Operation Time

Set the motor protection operation time in L1-02.

If, after operating the motor continuously at the rated current, a 150% overload is experienced, set the (hot start) electronic thermal protection operation time. The factory setting is resistance to 150% for 60 seconds.

The following diagram shows an example of the characteristics of the electronic thermal protection operation time (L1-02 = 1.0 min., operation at 60 Hz, general-purpose motor characteristics, when L1-01 is set to 1)

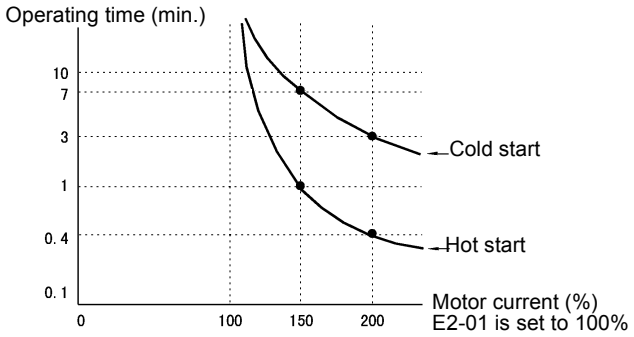

Fig 6.37 Motor Protection Operation Time

■Setting Precautions

- If multiple motors are connected to one Inverter, set constant L1-01 to 0 (disabled). To protect the motor, install a thermal relay in the motor power cable, and perform overload protection on each motor.
- To detect overloads in sufficient time, set the set value in constant L1-02 to a low setting.
- When using a general-purpose motor (standard motor), the cooling ability will be lowered by $f^{1/4}$ (frequency). Consequently, the frequency may cause motor overload protection (OL1) to occur, even below the rated current. If operating using the rated current at a low frequency, use a special motor.

■Setting the Motor Overload Pre-Alarm

If the motor overload protection function is enabled (i.e., L1-01 is set to other than 0) and you set H2-01 to H2-03 (multi-function output terminals M1-M2, P1-PC, and P2-PC function selection) to 1F (motor overload OL1 pre-alarm), the motor overload pre-alarm will be enabled. If the electronic thermal value reaches minimum 90% of the overload detection level, the output terminal that has been set will be turned ON.

◆ Motor Overheating Protection Using PTC Thermistor Inputs

Perform motor overheating protection using the thermistor temperature resistance characteristics of the PTC (Positive Temperature Coefficient) built into the windings of each motor phase.

■Related Constants

Constant Number	Name	Description	Setting Range	Factory Setting	Change during Operation	Control Methods		
						V/f	V/f with PG	Open Loop Vector
L1-03	Alarm operation selection during motor overheating	Set H3-09 to E, and select the operation when the input motor temperature (thermistor) input exceeds the alarm detection level (1.17 V). 0: Decelerate to stop 1: Coast to stop 2: Emergency stop using the deceleration time in C1-09. 3: Continue operation (H3 on the Digital Operator flashes).	0 to 3	3	No	A	A	A
L1-04	Motor overheating operation selection	Set H3-09 to E, and select the operation when the motor temperature (thermistor) input exceeds the operation detection level (2.34 V). 0: Decelerate to stop 1: Coast to stop 2: Emergency stop using the deceleration time in C1-09.	0 to 2	1	No	A	A	A
L1-05	Motor temperature input filter time constant	Set H3-09 to E, and set the primary delay time constant for motor temperature (thermistor) inputs in seconds.	0.00 to 10.00	0.20 s	No	A	A	A

■PTC Thermistor Characteristics

The following diagram shows the characteristics of the PTC thermistor temperature to the resistance value.

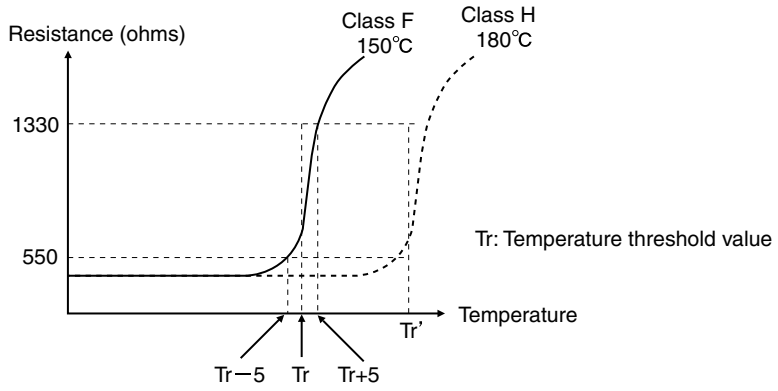

Fig 6.38 PTC Thermistor Temperature-Resistance Value Characteristics

■Operation during Motor Overheating

Set the operation if the motor overheats in constants L1-03 and L1-04. Set the motor temperature input filter time constant in L1-05. If the motor overheats, the OH3 and OH4 error codes will be displayed on the Digital Operator.

Error Codes If the Motor Overheats

Error Code	Details
OH3	Inverter stops or continues to operate, according to the setting in L1-03.
OH4	Inverter stops according to the setting in L1-04.

By setting H3-09 (Multi-function Analog Input Terminal A2 Function Selection) to E (Motor temperature input), you can detect alarm OH3 or OH4 using the PTC temperature-resistance characteristics, and protect the motor. The terminal connections are shown in the following diagram.

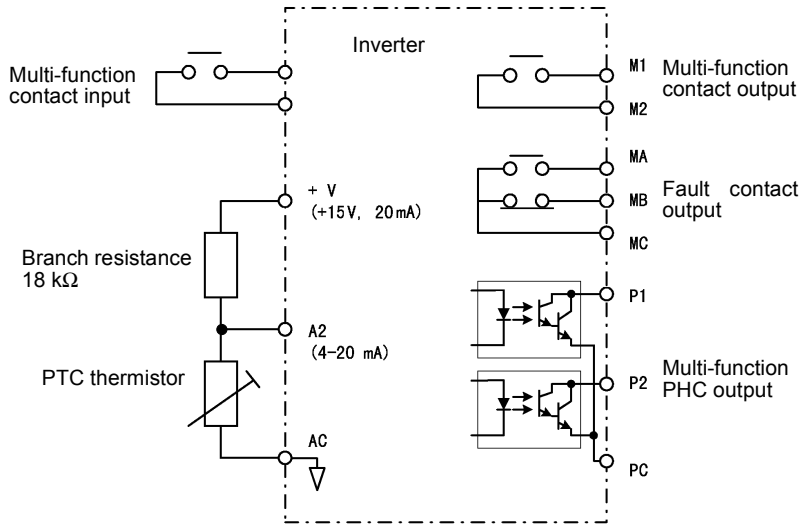

Fig 6.39 Mutual Connections During Motor Overheating Protection

◆ Limiting Motor Rotation Direction

If you set motor reverse rotation prohibited, a reverse run command will not be accepted even if it is input. Use this setting for applications in which reverse motor rotation can cause problems (e.g., fans, pumps, etc.)

■Related Constants

Constant Number	Name	Description	Setting Range	Factory Setting	Change during Operation	Control Methods		
						V/f	V/f with PG	Open Loop Vector
b1-04	Prohibition of reverse operation	0: Reverse enabled 1: Reverse disabled	0 or 1	0	No	A	A	A

Continuing Operation

This section explains functions for continuing or automatically restarting Inverter operation even if an error occurs.

◆ Restarting Automatically After Power Is Restored

Even if a temporary power loss occurs, you can restart the Inverter automatically after power is restored to continue motor operation.

To restart the Inverter after power is restored, set L2-01 to 1 or 2.

If L2-01 is set to 1, when power is restored within the time set in L2-02, the Inverter will restart. If the time set in L2-02 is exceeded, alarm UV1 (main circuit under voltage) will be detected.

If L2-01 is set to 2, when the main power supply is restored while the control power supply (i.e., power supply to the control panel) is backed up, the Inverter will restart. Consequently, alarm UV1 (main circuit under voltage) will not be detected.

■Related Constants

Constant Number	Name	Description	Setting Range	Factory Setting	Change during Operation	Control Methods		
						V/f	V/f with PG	Open Loop Vector
L2-01	Momentary power loss detection	0: Disabled (main circuit undervoltage (UV) detection) 1: Enabled (Restarted when the power returns within the time for L2-02. When L2-02 is exceeded, main circuit undervoltage detection.) 2: Enabled while CPU is operating. (Restarts when power returns during control operations. Does not detect main circuit undervoltage.)	0 to 2	0	No	A	A	A
L2-02	Momentary power loss ride-thru time	Ridethrough time, when momentary power loss selection (L2-01) is set to 1, in units of seconds.	0 to 2.0	0.1 s *1	No	A	A	A
L2-03	Min. base block (BB) time	Set the Inverter's minimum base block time in units of one second, when the Inverter is restarted after power loss ride through. Sets the time to approximately 0.7 times the motor secondary circuit time constant. When an over current or over voltage occurs when starting a speed search or DC injection braking, increase the set values.	0.1 to 5.0	0.1 s	No	A	A	A
L2-04	Voltage recovery time	Set the time required to return the Inverter output voltage to normal voltage at the completion of a speed search, in units of one second. Set the time required to recover from 0 V to the maximum voltage.	0.0 to 5.0	0.3 s*1	No	A	A	A
L2-05	Under voltage (UV) detection level	Sets the main circuit under voltage (UV) detection level (main circuit DC voltage) in V units. Usually setting is not necessary. Insert an AC reactor in the Inverter input side to lower the main circuit under voltage detection level.	150 to 210 *2	190 V *2	No	A	A	A

* 1. Factory settings depend on Inverter capacity. (The values shown are for a 200 V Class Inverter for 0.4 kW.)

* 2. These values are for a 200 V Class Inverter. For a 400 V Class Inverter, double the values.

■Setting Precautions

- Error output signals are not output during momentary power loss recovery.
- To continue Inverter operation after power has been restored, make settings so that run commands from the control main circuit terminal are stored even while power is suspended.
- If the momentary power loss operation selection is set to 0 (Disabled), when the momentary power loss exceeds 15 ms during operation, alarm UV1 (main circuit under voltage) will be detected.

◆ Speed Search

The speed search function finds the actual speed of the motor that is rotating using inertia, and then starts smoothly from that speed. When restoring power after a temporary power loss, the speed search function switches connection from the commercial power supply, and then restarts the fan that is rotating using inertia.

■Related Constants

Constant Number	Name	Description	Setting Range	Factory Setting	Change during Operation	Control Methods		
						V/f	V/f with PG	Open Loop
b3-01	Speed search selection (current detection or speed calculation)	Enables/disables the speed search function for the run command and sets the speed search method. 0: Disabled, speed calculation 1: Enabled, speed calculation 2: Disabled, current detection 3: Enabled, current detection Speed Calculation When the search is started, the motor speed is calculated and acceleration/deceleration is performed from the calculated speed to the specified frequency (motor direction is also searched). Current Detection The speed search is started from the frequency when power was momentarily lost and the maximum frequency, and the speed is detected at the search current level.	0 to 4	2*1	No	A	A	A
b3-02	Speed search operating current (current detection)	Sets the speed search operation current as a percentage, taking the Inverter rated current as 100%. Not usually necessary to set. When restarting is not possible with the factory settings, reduce the value.	0 to 200	120%	No	A	No	A
b3-03	Speed search deceleration time (current detection)	Sets the output frequency deceleration time during speed search in 1-second units. Set the time for deceleration from the maximum output frequency to the minimum output frequency.	0.1 to 10.0	2.0 s	No	A	No	A
b3-05	Speed search wait time (current detection or speed calculation)	Sets the contactor operating delay time when there is a contactor on the output side of the Inverter. When a speed search is performed after recovering from a momentary power loss, the search operation is delayed by the time set here.	0.0 to 20.0	0.2 s	No	A	A	A
L2-03	Min. base block time	Sets the Inverter's minimum base block time in units of one second, when the inverter is restarted after power loss ride-through. Sets the time to approximately 0.7 times the motor secondary circuit time constant. If an over current or undercurrent occurs when starting a speed search or DC injection braking, increase the set values.	0.1 to 5.0	0.1 s *1	No	A	A	A
L2-04	Voltage recovery time	Sets the time required to return the Inverter output voltage to normal voltage at the completion of a speed search, in units of one second. Sets the time required to recover from 0 V to the maximum voltage.	0.0 to 5.0	0.3 s *2	No	A	A	A

* 1. The factory setting will change when the control method is changed. (Open loop vector control factory settings are given.)
* 2. Factory settings depend on Inverter capacity. (The values shown are for a 200 V Class Inverter for 0.4 kW.)

Multi-function Contact Inputs

Set Value	Function	Control Methods		
		V/f	V/f with PG	Open Loop Vec-tor
61	External search command 1 OFF: Speed search disabled (Start from lowest output frequency) ON: Speed estimation (Estimate the motor speed, and start search from estimated speed) Current detection (Start speed search from maximum output frequency)	Yes	No	Yes
62	External search command 2 OFF: Speed search disabled (Start from lowest output frequency) ON: Speed estimation (Estimate the motor speed, and start search from estimated speed) (Same operation as external search command 1) Current detection: Start speed search from set frequency (reference frequency when search command was input).	Yes	No	Yes

■Setting Precautions

- When both external search commands 1 and 2 are set for the multi-function contact terminals, an OPE03 (invalid multi-function input selection) operation error may occur. Set either external search command 1 or external search command 2.
- If speed search during startup is selected when using V/f control with PG, the Unit will start from the frequency detected by PG.
- If performing speed search using external search commands, add an external sequence so that the period when the run command and external search command are both ON is at the very least the Minimum Base block Time (L2-03).
- If the Inverter output is equipped with a contact, set the contact operation delay time in the Speed Search Wait Time (b3-05). The factory setting is 0.2 s. When not using the contact, you can reduce the search time by making the setting 0.0 s. After waiting for the speed search wait time, the Inverter starts the speed search.
- Constant b3-02 is a current detection speed search (current detection level for search completion). When the current falls below the detection level, the speed search is viewed as completed, and the motor accelerates or decelerates to the set frequency. If the motor cannot restart, lower the set value.
- If an over current (OC) is detected when using speed search after recovery following a power loss, lengthen the Minimum Base block Time (L2-03).

■Application Precautions for Speed Searches Using Estimated Speed

- When using V/f control with or without a PG, always perform stationary auto tuning for only line-to-line resistance before using speed searches based on estimated speeds.
- When using open loop vector control, always perform rotational auto tuning before using speed searches based on estimated speeds.
- If the cable length between the motor and Inverter is changed after auto tuning has been performed, perform stationary auto tuning for only line-to-line resistance again.

IMPORTANT

The motor will not rotate during stationary auto tuning or stationary auto tuning only for line-to-line resistance is performed.

■Speed Search Selection

Set whether to enable or disable speed search at startup, and set the type of speed search (estimated speed or current detection) using setting b3-01. To perform speed search when inputting the run command, set b3-01 to 1 or 3.

Table 6.1 Search Methods

Search Name	Estimated Speed	Current Detection
Search Method	Estimates the motor speed when the search starts, and accelerates and decelerates from the estimated speed to the set frequency. You can also search including direction of motor rotation.	Starts speed search from the frequency when the temporary power loss was detected, or from the highest frequency, and performs speed detection at the current level during the search.
External Speed Search Command	External search command 1 and external search command 2 become the same operation, estimating the motor speed and starting the search from the estimated speed.	External speed search command 1: Starts speed search from the maximum output frequency. External speed search command 2: Starts speed search from the frequency reference set before the search command.
Application Precautions	Cannot be used multi-motor drives, motors two or more frames smaller than the Inverter capacity, and high-speed motors (130 Hz min.)	In control method without PG, the motor may accelerate suddenly with light loads.

■Estimated Speed Search

The time chart for estimated speed searches is shown below.

Search at Startup

The time chart for when speed search at startup and speed search to multi-function input terminals us shown below.

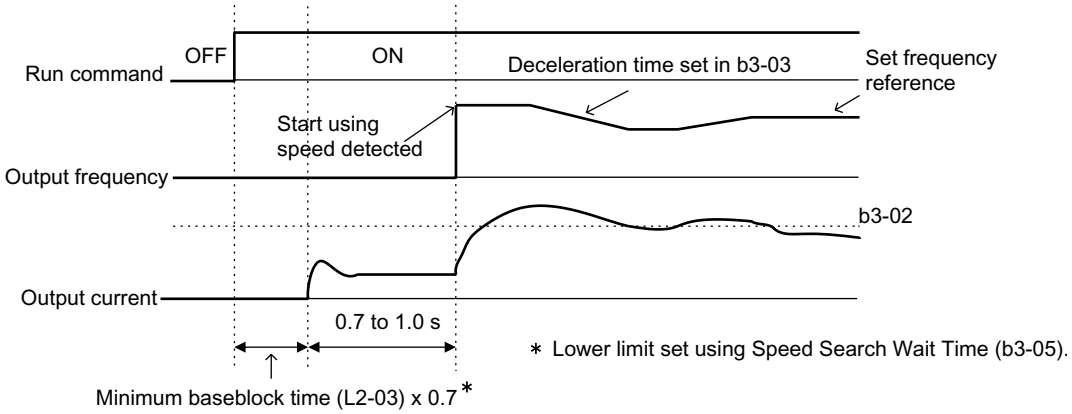

Note: If the stopping method is set to coast to stop, and the run command turns ON in a short time, the operation may be the same as the search in case 2.

Fig 6.40 Speed Search at Startup (Estimated Speed)

Speed Search after Short Base block (during Power Loss Recovery, etc.)

- Loss Time Shorter Than the Minimum Base block Time (L2-03)

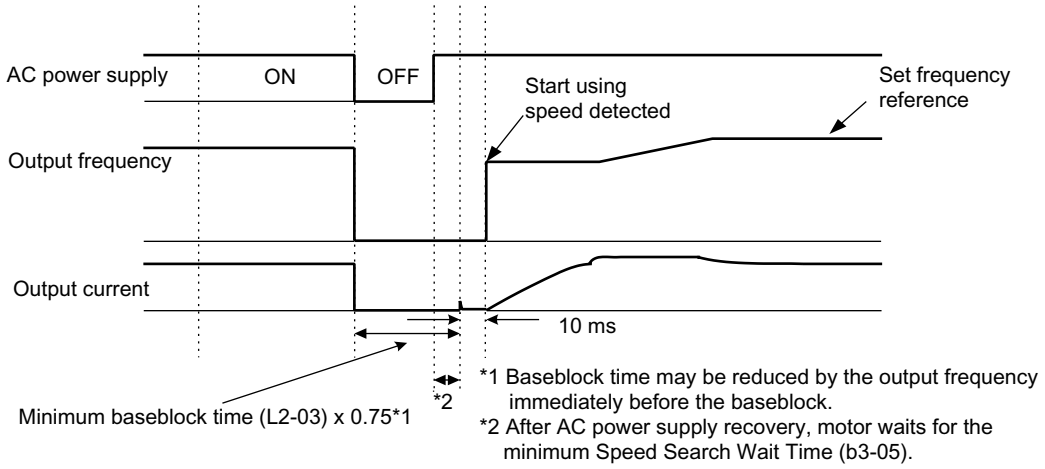

Fig 6.41 Speed Search after Base block (When Estimated Speed: Loss Time Is Set in L2-03)

- Loss Time Longer Than the Minimum Base block Time (L2-03)

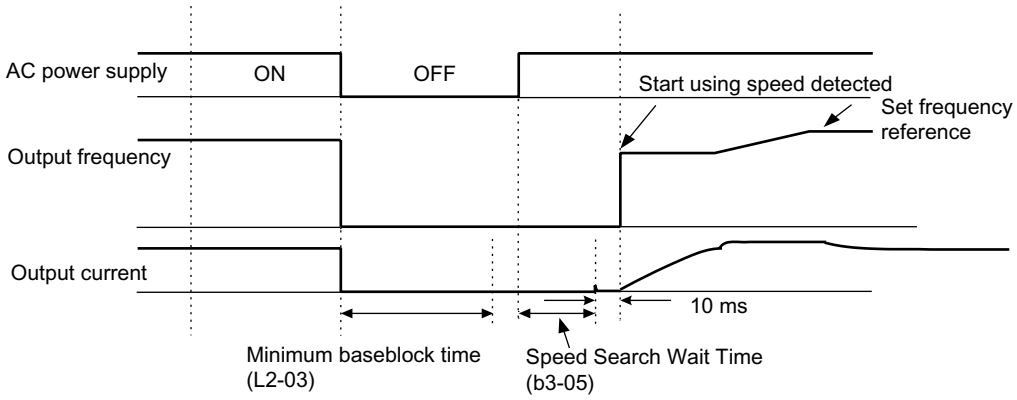

Fig 6.42 Speed Search After Base block (Estimated Speed: Loss Time > L2-03)

■Current Detection Speed Search

The time charts for current detection speed search is shown below.

Speed Search at Startup

The time chart when speed search at startup or external speed search command is selected is shown below.

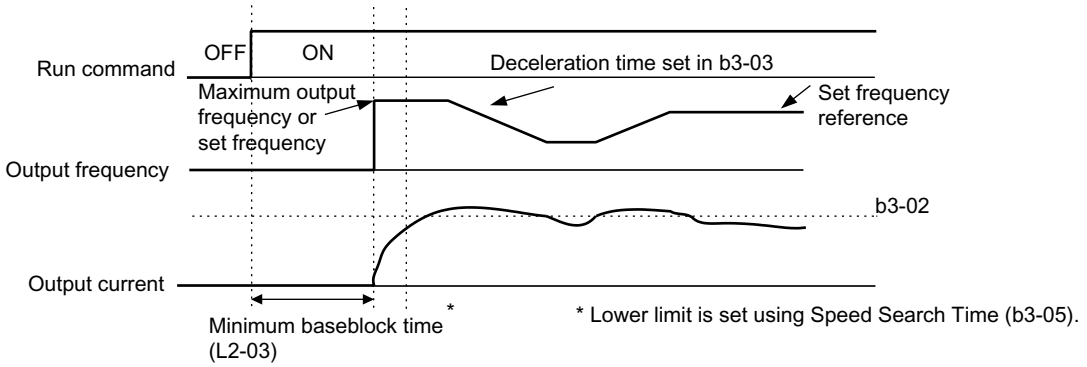

Fig 6.43 Speed Search at Startup (Using Current Detection)

Speed Search after Short Base block (during Power Loss Recovery, etc.)

- Loss Time Shorter Than Minimum Base block Time

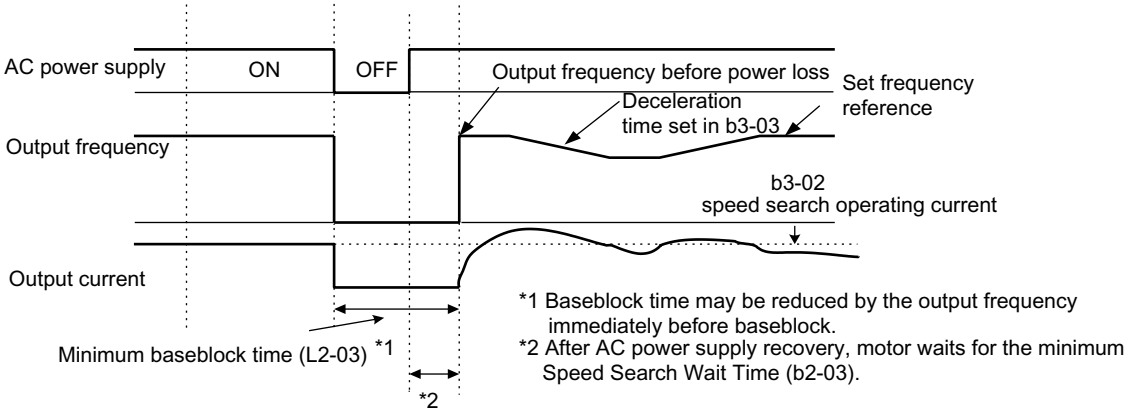

Fig 6.44 Speed Search After Base block (Current Detection: Loss Time < L2-03)

- Loss Time Longer Than Minimum Base block Time

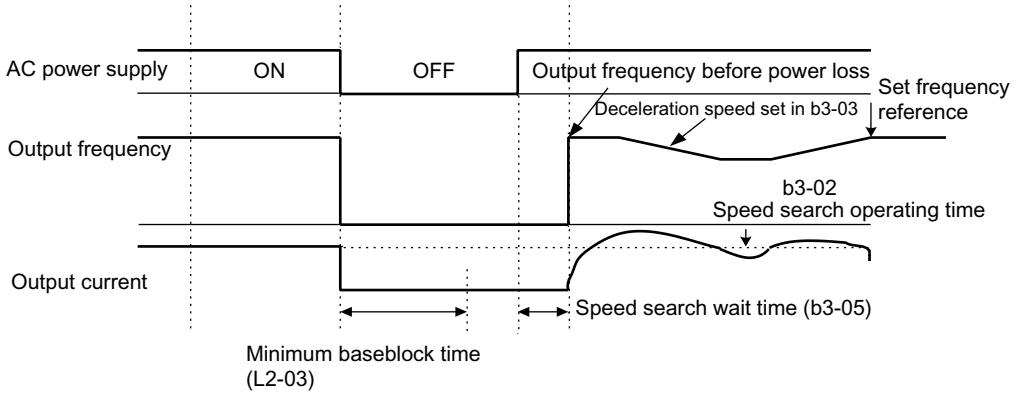

Fig 6.45 Speed Search After Base block (Current Detection: Loss Time > L2-03)

◆ Continuing Operation at Constant Speed When Frequency Reference Is Lost

The frequency reference loss detection function continues operation using 80% speed of the frequency reference before loss when the frequency reference using an analog input is reduced 90% or more in 400 ms.

When the error signal during frequency reference loss is output externally, set H2-01 to H2-03 (multi-function contact output terminal M1-M2, P1-PC, and P2-PC function selection) to C (frequency reference lost).

■Related Constants

Constant Number	Name	Description	Setting Range	Factory Setting	Change during Operation	Control Methods		
						V/f	V/f with PG	Open Loop Vector
L4-05	Operation when frequency reference is missing	0: Stopped (Operation follows frequency reference.) 1: Operation at 80% speed continues (At 80% of speed before the frequency reference was lost.) Frequency reference is lost: Frequency reference dropped over 90% in 400 ms.	0 or 1	0	No	A	A	A

◆ Restarting Operation After Transient Error (Auto Restart Function)

If an Inverter error occurs during operation, the Inverter will perform self-diagnosis. If no error is detected, the Inverter will automatically restart. This is called the auto restart function.

Set the number of auto restarts in constant L5-01.

The auto restart function can be applied to the following errors. If an error not listed below occurs, the protection function will operate and the auto restart will not function.

- OC (Over current)
- GF (Ground fault)
- PUF (Fuse blown)
- OV (Main circuit over voltage)
- UV1 (Main Circuit Under voltage, Main Circuit MC Operation Failure)*
- PF (Main circuit voltage fault)
- LF (Output phase failure)
- RH (Braking resistor overheated)
- RR (Braking transistor error)
- OL1 (Motor overload)
- OL2 (Inverter overload)
- OH1 (Motor overheat)
- OL3 (Over torque)
- OL4 (Over torque)

* When L2-01 is set to 1 or 2 (continue operation during momentary power loss)

■Auto Restart External Outputs

To output auto restart signals externally, set H2-01 to H2-03 (multi-function contact output terminals M1-M2, P1-PC, and P2-PC function selection) to 1E (auto restart).

■Related Constants

Constant Number	Name	Description	Setting Range	Factory Setting	Change during Operation	Control Methods		
						V/f	V/f with PG	Open Loop Vector
L5-01	Number of auto restart attempts	Set the number of auto restarts attempts. Automatically restarts after a fault and conducts a speed search from the run frequency.	0 to 10	0	No	A	A	A
L5-02	Auto restart operation selection	Sets whether a fault contact output is activated during fault restart. 0: Not output (Fault contact is not activated.) 1: Output (Fault contact is activated.)	0 or 1	0	No	A	A	A

■ Application Precautions

- The number of auto restarts count is reset under the following conditions:
  - After auto restart, normal operation has continued for 10 minutes.
  - After the protection operation has been performed, and the error has been verified, and an error reset has been input.
  - After the power supply is turned OFF, and then ON again.
- Do not use the auto restart function with variable loads.

Inverter Protection

This section explains the functions for protecting the Inverter and the braking resistor.

◆ Performing Overheating Protection on Mounted Braking Resistors

Perform overheating protection on Inverter-mounted braking resistors (Model: ERF-150WJ □□).

When overheating in a mounted braking resistor is detected, an alarm RH (Mounted braking resistor overheating) is displayed on the Digital Operator, and the motor coasts to a stop.

■Related Constants

Constant Number	Name	Description	Setting Range	Factory Setting	Change during Operation	Control Methods		
						V/f	V/f with PG	Open Loop Vector
L8-01	Protect selection for internal DB resistor (Type ERF)	0: Disabled (no overheating protection) 1: Enabled (overheating protection)	0 or 1	0	No	A	A	A

Multi-function Contact Outputs (H2-01 to H2-03)

Set Value	Details	Control Methods		
		V/f	V/f with PG	Open Loop Vector
D	Braking resistor fault (ON: Resistor overheats or brake transistor fault)	Yes	Yes	Yes

INFO

The most likely causes of RH (Mounted braking resistor overheating) being detected are that the deceleration time is too short or that the motor regeneration energy is too large. In these cases, lengthen the deceleration time or replace the Braking Resistor Unit with one with a higher breaking capacity.

◆ Reducing Inverter Overheating Pre-Alarm Warning Levels

The Inverter detects the temperature of the cooling fins using the thermistor, and protects the Inverter from overheating. You can receive Inverter overheating pre-alarms in units of 10°C.

The following options are available when an overheating pre-alarm occurs (L8-03 setting).

- Operation stops (major fault)
- Operation continues (minor fault) with OH alarm flashing on the digital operator.

■Related Constants

Constant Number	Name	Description	Setting Range	Factory Setting	Change during Operation	Control Methods		
						V/f	V/f with PG	Open Loop Vector
L8-02	Overheat pre-alarm level	Sets the detection temperature for the Inverter overheat detection pre-alarm in °C. The pre-alarm detects when the cooling fin temperature reaches the set value.	50 to 130	95°C	No	A	A	A
L8-03	Inverter overheat (OH) pre-alarm operation selection	Sets the operation for when the Inverter overheat pre-alarm goes ON. 0: Decelerate to stop in deceleration time C1-02. 1: Coast to stop 2: Fast stop in fast-stop time C1-09. 3: Continue operation (Monitor display only.) A fault will be given in setting 0 to 2 and a minor fault will be given in setting 3.	0 to 3	3	No	A	A	A

Input Terminal Functions

This section explains input terminal functions, which set operating methods by switching functions for the multi-function contact input terminals (S3 to S7).

◆ Temporarily Switching Operation between Digital Operator and Control Circuit Terminals

You can switch the Inverter run command inputs and frequency reference inputs between local (i.e., Digital Operator) and remote (input method using b1-01 and b1-02).

You can switch between local and remote by turning ON and OFF the terminals if an input from H1-01 to H1-05 (multi-function contact input terminal S3 to S7 function selection) has been set to 1 (local/remote selection).

To set the control circuit terminals to remote, set b1-01 and b1-02 to 1 (Control circuit terminals).

■Related Constants

Constant Number	Name	Description	Setting Range	Factory Setting	Change during Operation	Control Methods		
						V/f	V/f with PG	Open Loop Vector
b1-01	Reference selection	Set the frequency reference input method. 0: Digital Operator 1: Control circuit terminal (analog input) 2: MEMOBUS communications 3: Option Card 4: Pulse input	0 to 4	1	No	Q	Q	Q
b1-02	Operation method selection	Set the run command input method 0: Digital Operator 1: Control circuit terminal (sequence input) 2: MEMOBUS communications 3: Option Card	0 to 3	1	No	Q	Q	Q

INFO

You can also perform local/remote switching using the LOCAL/REMOTE Key on the Digital Operator. When the local/remote function has been set in the external terminals, the LOCAL/REMOTE Key function on the Digital Operator will be disabled.

◆ Blocking Inverter Outputs (Base block Commands)

Set 8 or 9 (Base block command NO/NC) in one of the constants H1-01 to H1-05 (multi-function contact input terminal S3 to S7 function selection) to perform base block commands using the terminal's ON/OFF operation, and prohibit Inverter output using the base block commands.

Clear the base block command to restart the operation using speed search from previous frequency references.

Multi-function Contact Inputs (H1-01 to H1-05)

Set Value	Function	Control Methods		
		V/f	V/f with PG	Open Loop Vec-tor
8	External base block NO (Normally Open contact: Base block when ON)	Yes	Yes	Yes
9	External base block NC (Normally Closed contact: Base block when OFF)	Yes	Yes	Yes

■Time Chart

The time chart when using base block commands is shown below.

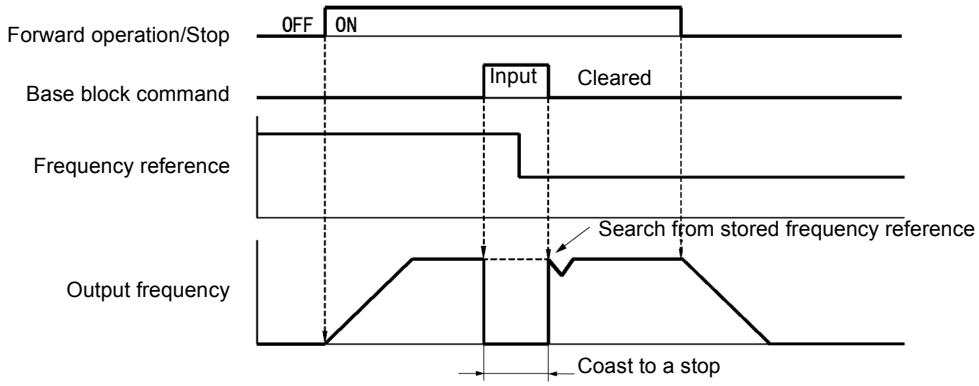

Fig 6.46 Base block Commands

IMPORTANT

If using base block commands with a variable load, do not frequently input base block commands during operation, as this may cause the motor to suddenly start coasting, and may result in the motor falling or slipping.

◆ Stopping Acceleration and Deceleration (Acceleration/Deceleration Ramp Hold)

The acceleration/deceleration ramp hold function stops acceleration and deceleration, stores the output frequency at that point in time, and then continues operation.

Set one of the constants H1-01 to H1-05 (multi-function contact input terminal S3 to S7 function selection) to A (acceleration/deceleration ramp hold) to stop acceleration and deceleration when the terminal is turned ON and to store the output frequency at that point in time. Acceleration and deceleration will restart when the terminal is turned OFF.

If d4-01 is set to 1 and the Acceleration/Deceleration Ramp Hold command is input, the output frequency is still stored even after the power supply is turned OFF.

■Related Constants

Constant Number	Name	Description	Setting Range	Factory Setting	Change during Operation	Control Methods		
						V/f	V/f with PG	Open Loop Vector
d4-01	Frequency reference hold function selection	Set whether or not frequencies on hold will be recorded. 0: Disabled (when operation is stopped or the power is turned ON again starts at 0.) 1: Enabled (when operation is stopped or the power is turned ON again starts at the previous hold frequency.) This function is available when the multi-function inputs “Accel/Decel Ramp Hold” or “up/down” commands are set.	0 or 1	0	No	A	A	A

■Time Chart

The time chart when using Acceleration/Deceleration Ramp Hold commands is given below.

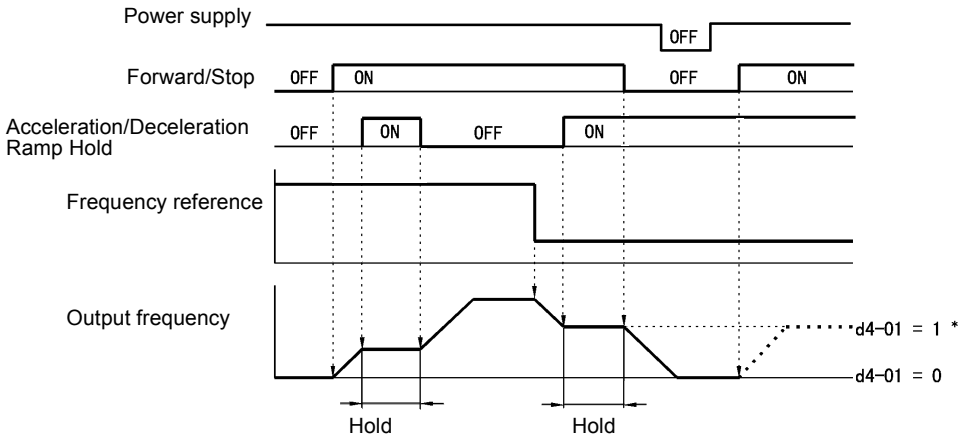

Fig 6.47 Acceleration/Deceleration Ramp Hold

■Application Precautions

- When d4-01 is set to 1, the output frequency on hold is stored even after the power supply is turned OFF. If performing operations using this frequency after the Inverter has also been turned OFF, input the run command with the Acceleration/Deceleration Ramp Hold turned ON.
- When d4-01 is set to 0 and a run command is input while the Acceleration/Deceleration Ramp Hold is turned ON, the output frequency will be set to zero.
- If you input an Acceleration/Deceleration Ramp Hold command by error when decelerating during positioning, deceleration may be canceled.

◆ Raising and Lowering Frequency References Using Contact Signals (UP/DOWN)

The UP and DOWN commands raise and lower Inverter frequency references by turning ON and OFF a multi-function contact input terminal S3 to S7.

To use this function, set one of the constants H1-01 to H1-05 (multi-function contact input terminal S3 to S7 function selection) to 10 (UP command) and 11 (DOWN command). Be sure to allocate two terminals so that the UP and DOWN commands can be used as a pair.

The output frequency depends on the acceleration and deceleration time. Be sure to set b1-02 (Run command selection) to 1 (Control circuit terminal).

■Related Constants

Constant Number	Name	Description	Setting Range	Factory Setting	Change during Operation	Control Methods		
						V/f	V/f with PG	Open Loop Vector
d2-01	Frequency reference upper limit	Set the output frequency upper limit as a percent, taking the maximum output frequency to be 100%.	0.0 to 110.0	100.0%	No	A	A	A
d2-02	Frequency reference lower limit	Set the output frequency lower limit as a percentage of the maximum output frequency.	0.0 to 110.0	0.0%	No	A	A	A
d2-03	Master speed reference lower limit	Set the master speed frequency reference lower limit as a percent, taking the maximum output frequency to be 100%.	0.0 to 110.0	0.0%	No	A	A	A

■Precautions

When setting and using UP and DOWN commands, observe the following precautions.

Setting Precautions

If multi-function input terminals S3 to S7 are set as follows, operation error OPE03 (Invalid multi-function input selection) will occur:

- Only either the UP command or DOWN command has been set.
- UP/DOWN commands and Acceleration/Deceleration Ramp Hold have been allocated at the same time.

Application Precautions

- Frequency outputs using UP/DOWN commands are limited by the frequency reference upper and lower limits set in constants d2-01 to d2-03. Here, frequency references from analog frequency reference terminal A1 becomes the frequency reference lower limit. If using a combination of the frequency reference from terminal A1 and the frequency reference lower limit set in either constant d2-02 or d2-03, the larger lower limit will become the frequency reference lower limit.
- If inputting the run command when using UP/DOWN commands, the output frequency accelerates to the frequency reference lower limit.
- When using UP/DOWN commands, multi-step operations are disabled.
- When d4-01 (Frequency Reference Hold Function Selection) is set to 1, the frequency reference held using the UP/DOWN functions is stored even after the power supply is turned OFF. When the power supply is turned ON and the run command is input, the motor accelerates to the frequency reference that has been stored. To reset (i.e., to 0 Hz) the stored frequency reference, turn ON the UP or DOWN command while the run command is ON.

■Connection Example and Time Chart

The time chart and settings example when the UP command is allocated to the multi-function contact input terminal S3, and the DOWN command is allocated to terminal S4, are shown below.

Constant	Name	Set Value
H1-01	Multi-function input (terminal S3)	10
H1-02	Multi-function input (terminal S4)	11

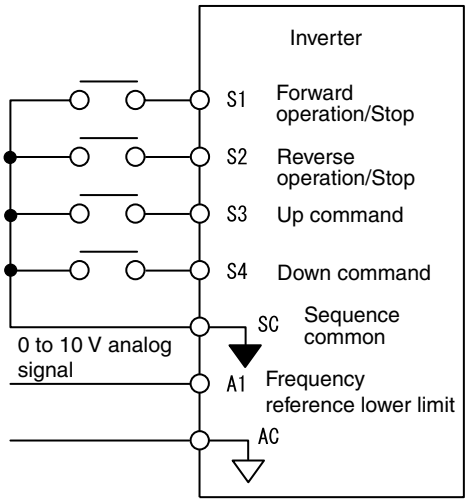

Fig 6.48 Connection Example when UP/DOWN Commands Are Allocated

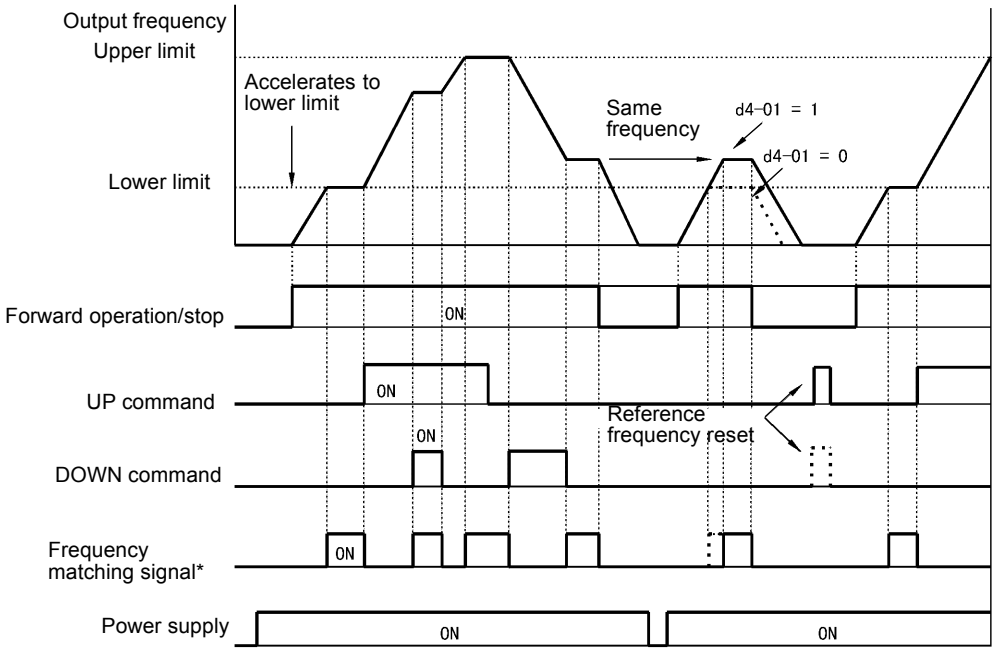

* The frequency matching signal turns ON when the motor is not accelerating/ decelerating while the run command is ON.

Fig 6.49 UP/DOWN Commands Time Chart

◆ Accelerating and Decelerating Constant Frequencies in the Analog References (+/- Speed)

The +/- speed function increments or decrements the frequency set in analog frequency reference d4-02 (+/- Speed Limit) using two contact signal inputs.

To use this function, set One of the constants H1-01 to H1-05 (multi-function contact terminal inputs S3 to S7 function selection) to 1C (Trim Control Increase command) and 1D (Trim Control Decrease command). Be sure to allocate two terminals so that the Trim Control Increase command and Trim Control Decrease command can be used as a pair.

■Related Constants

Constant Number	Name	Description	Setting Range	Factory Setting	Change during Operation	Control Methods			Constant Number
						V/f	V/f with PG	Open Loop Vector	
d4-02	+/- speed limits	Set the frequency to be add to or subtracted from the analog frequency reference as a percent, taking the maximum output frequency to be 100%. Enabled when the increase (+) speed command or decrease (-) speed command is set for a multi-function input.	0 to 100	10%	No	A	A	A	299H

■Trim Control Increase/Decrease Command and Frequency Reference

The frequency references using Trim Control Increase/Decrease command ON/OFF operations are shown below.

Frequency Reference	Set Frequency Reference + d4-02	Set Frequency Reference - d4-02
Trim Control Increase Command Terminal	ON	OFF
Trim Control Decrease Command Terminal	OFF	ON

■Application Precautions

- Trim Control Increase/Decrease command is enabled when speed reference > 0 and the speed reference is from an analog input.
- When the analog frequency reference value - d4-02 < 0, the frequency reference is set to 0.
- If only the Trim Control Increase command or Trim Control Decrease command has been set for a multi-function contact input terminal S3 to S7, operation error OPE03 (invalid multi-function input selected) will occur.

◆ Hold Analog Frequency Using User-set Timing

When one of H1-01 to H1-05 (multi-function contact input terminal S3 to S7 function selection) is set to 1E (sample/hold analog frequency command), the analog frequency reference will be held from 100 ms after the terminal is turned ON, and operation will continue thereafter at that frequency.

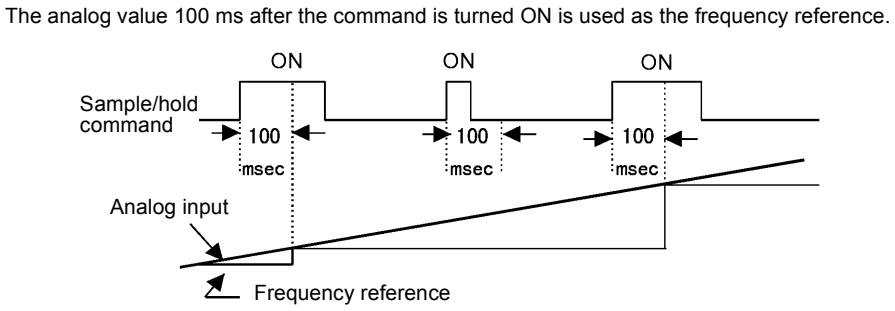

Fig 6.50 Sample/Hold Analog Frequency

■Precautions

When setting and executing sample and hold for analog frequency references, observe the following precautions.

Setting Precautions

When using sample/hold of analog frequency reference, you cannot use the following commands at the same time. If these commands are used at the same time, operation error OPE03 (invalid multi-function input selection) will occur.

- Acceleration/Deceleration Ramp Hold command
- UP/DOWN command
- Trim Control Increase/Decrease command

Application Precautions

- When performing sample/hold of analog frequency references, be sure to store references of 100 ms minimum. If the reference time is less than 100 ms, the frequency reference will not be held.
- The analog frequency reference that is held will be deleted when the power supply is turned OFF.

◆ Switching Operations between a Communications Option Card and Control Circuit Terminals

You can switch reference input between the Communications Option Card and the control circuit terminals. Set one of the constants H1-01 to H1-05 (multi-function contact input terminal S3 to S7 function selection) to 2 (Option/Inverter selection) to enable switching reference input using the terminal ON/OFF status when the Inverter is stopped.

■Setting Precautions

To switch command inputs between the Communications Option Card and the control circuit terminals, set the following constants.

- Set b1-01 (Reference Selection) to 1 (Control circuit terminal [analog input])
- Set b1-02 (Operation Method Selection to 1 (Control circuit terminal (sequence inputs])
- Set one of the constants H1-01 to H1-05 (multi-function contact input terminal S3 to S7 function selection) to 2 (Option/Inverter selection).

Terminal Status	Frequency Reference and Run Command Selection
OFF	Inverter (Can be operated from frequency reference or control circuit terminal from analog input terminal.)
ON	Communications Option Card (Frequency reference and run command are enabled from communications Option Card.)

◆ Jog Frequency Operation without Forward and Reverse Commands (FJOG/RJOG)

The FJOG/RJOG command functions operate the Inverter using jog frequencies by using the terminal ON/OFF operation. When using the FJOG/RJOG commands, there is no need to input the run command.

To use this function, set one of the constants H1-01 to H1-05 (multi-function contact input terminal S3 to S7 function selection) to 12 (FJOG command) or 13 (RJOG command).

■Related Constants

Constant Number	Name	Description	Setting Range	Factory Setting	Change during Operation	Control Methods		
						V/f	V/f with PG	Open Loop Vector
d1-17	Jog frequency reference	The frequency reference when the jog frequency reference selection, FJOG command, or RJOG command is ON.	0 to 400.00	6.00 Hz	Yes	Q	Q	Q

Multi-Function Contact Inputs (H1-01 to H1-05)

Set Value	Function	Control Methods		
		V/f	V/f with PG	Open Loop Vec-tor
12	FJOG command (ON: Forward run at jog frequency d1-17)	Yes	Yes	Yes
13	RJOG command (ON: Reverse run at jog frequency d1-17)	Yes	Yes	Yes

■Application Precautions

- Jog frequencies using FJOG and RJOG commands are given priority over other frequency references.
- When both FJOG command and RJOG commands are ON for 500 ms or longer at the same time, the Inverter stops according to the setting in b1-03 (stopping method selection).

◆ Stopping the Inverter by Notifying Peripheral Device Errors to the Inverter (External Error Function)

The external error function performs the error contact output, and stops the Inverter operation if the Inverter peripheral devices break down or an error occurs. The digital operator will display EFx (External error [input terminal Sx]). The x in EFx shows the terminal number of the terminal that input the external error signal. For example, if an external error signal is input to terminal S3, EF3 will be displayed.

To use the external error function, set one of the values 20 to 2F in one of the constants H1-01 to H1-05 (multi-function contact input terminal S3 to S7 function selection).

Select the value to be set in H1-01 to H1-05 from a combination of any of the following three conditions.

- Signal input level from peripheral devices
- External error detection method
- Operation during external error detection

The following table shows the relationship between the combinations of conditions and the set value in H1-□□.

Set Value	Input Level (See Note 1.)		Error Detection Method (See Note 2.)		Operation During Error Detection			
	NO Con-tact	NC Con-tact	Constant Detection	Detection During Operation	Deceler-ate to Stop (Error)	Coast to Stop (Error)	Emer-gency Stop (Error)	Continue Operation (Warning)
20	Yes		Yes		Yes			
21		Yes	Yes		Yes			
22	Yes			Yes	Yes			
23		Yes		Yes	Yes			
24	Yes		Yes			Yes		
25		Yes	Yes			Yes		
26	Yes			Yes		Yes		
27		Yes		Yes		Yes		
28	Yes		Yes				Yes	
29		Yes	Yes				Yes	

Set Value	Input Level (See Note 1.)		Error Detection Method (See Note 2.)		Operation During Error Detection			
	NO Contact	NC Contact	Constant Detection	Detection During Operation	Decelerate to Stop (Error)	Coast to Stop (Error)	Emergency Stop (Error)	Continue Operation (Warning)
2A	Yes			Yes			Yes	
2B		Yes		Yes			Yes	
2C	Yes		Yes					Yes
2D		Yes	Yes					Yes
2E	Yes			Yes				Yes
2F		Yes		Yes				Yes

Note1.Set the input level to detect errors using either signal ON or signal OFF. (NO contact: External error when ON; NC contact: External error when OFF).

2.Set the detection method to detect errors using either constant detection or detection during operation.

Constant detection: Detects while power is supplied to the Inverter.

Detection during operation: Detects only during Inverter operation.

Monitor Constants

This section explains the analog monitor and pulse monitor constants.

◆ Using the Analog Monitor Constants

This section explains the analog monitor constants.

■Related Constants

Constant Number	Name	Description	Setting Range	Factory Setting	Change during Operation	Control Methods		
						V/f	V/f with PG	Open Loop Vector
H4-01	Monitor selection (terminal FM)	Sets the number of the monitor item to be output (U1-□□) from terminal FM. 4, 10 to 14, 28, 34, 39, 40 cannot be set. 17, 23, 25, 29, 30, 31 are not used.	1 to 40	2	No	A	A	A
H4-02	Gain (terminal FM)	Sets the multi-function analog output 1 voltage level gain. Sets whether the monitor item output will be output in multiples of 10 V. The maximum output from the terminal is 10 V. A meter calibration function is available.	0.00 to 2.50	1.00	Yes	Q	Q	Q
H4-03	Bias (terminal FM)	Sets the multi-function analog output 1 voltage level bias. Sets output characteristic up/down parallel movement as a percentage of 10 V. The maximum output from the terminal is 10 V. A meter calibration function is available.	-10.0 to +10.0	0.0%	Yes	A	A	A
H4-04	Monitor selection (terminal AM)	Sets the number of the monitor item to be output (U1-□□) from terminal AM. 4, 10 to 14, 28, 34, 39, 40 cannot be set. 17, 23, 25, 29, 30, 31, 35 are not used.	1 to 40	3	No	A	A	A
H4-05	Gain (terminal AM)	Set the voltage level gain for multi-function analog output 2. Set the number of multiples of 10 V to be output as the 100% output for the monitor items. The maimum output from the terminal is 10 V. A meter calibration function is available.	0.00 to 2.50	0.50	Yes	Q	Q	Q
H4-06	Bias (terminal AM)	Set the multi-function analog output 2 voltage level bias. Sets output characteristic up/down parallel movement as a percentage of 10 V. The maximum output from the terminal is 10 V. A meter calibration function is available.	-10.0 to +10.0	0.0%	Yes	A	A	A
H4-07	Analog output 1 signal level selection	Sets the signal output level for multi-function output 1 (terminal FM) 0: 0 to 10 V output 1: 0 to ±10 V output	0 or 1	0	No	A	A	A

Constant Number	Name	Description	Setting Range	Factory Setting	Change during Operation	Control Methods		
						V/f	V/f with PG	Open Loop Vector
F4-01	Channel 1 monitor selection	Effective when the Analog Monitor Card is used. Monitor selection: Set the number of the monitor item to be output. (U1-□□) Gain: Set the multiple of 10 V for outputting monitor items. 4, 10 to 14, 28, 34, 39, 40 cannot be set. 17, 23, 25, 29, 30, 31, 35 are not used. When the AO-12 Analog Monitor Card is used, outputs of ±10 V are possible. To output ±10 V, set F4-07 or F4-08 to 1. When the AO-08 Analog Monior Card is used, only outputs of 0 to +10 V are possible. A meter calibration function is available.	1 to 40	2	No	A	A	A
F4-02	Channel 1 gain		0.00 to 2.50	1.00	Yes	A	A	A
F4-03	Channel 2 monitor selection		1 to 40	3	No	A	A	A
F4-04	Channel 2 gain		0.00 to 2.50	0.50	Yes	A	A	A
F4-05	Channel 1 output monitor bias	Set the channel 1 item bias to 100%/10 V when the analog monitor card is used.	-10.0 to 10.0	0.0	Yes	A	A	A
F4-06	Channel 2 output monitor bias	Set the channel 2 item bias to 100%/10 V when the analog monitor card is used.	-10.0 to 10.0	0.0	Yes	A	A	A
F4-08	Analog output signal level for channel 2	0: 0 to 10 V 1: -10 to 10 V	0 or 1	0	No	A	A	A

■Selecting Analog Monitor Items

The digital operator monitor items (U1-□□ [status monitor]) are output from multi-function analog output terminals FM-AC and AM-AC. Refer to *Chapter 5 User Constants*, and set the values for the □□ part of U1-□□ (status monitor).

Alternatively, you can output monitor items (U1-□□ [status monitor]) from analog output option terminal channels 1 and 2 on analog monitor cards AO-08 and AO-12. Refer to the table of constants, and set the values.

■Adjusting the Analog Monitor Items

Adjust the output voltage for multi-function analog output terminals FM-AC and AM-AC using the gain and bias in H4-02, H4-03, H4-05, and H4-06. Also, adjust the output voltage for output channels 1 and 2 of Analog Output Option Cards AO-08 and AO-12 using the gain and bias in F4-02, F4-04, and F4-06.

Adjusting the Meter

Display the data setting display for the gain and bias constants corresponding to the output channel of the Inverter Unit and the AO Option Card while the Inverter is stopped to output the following voltages to the analog monitor terminal. This will enable meter adjusting while the Inverter is stopped.

10 V/100% monitor output × output gain + output bias

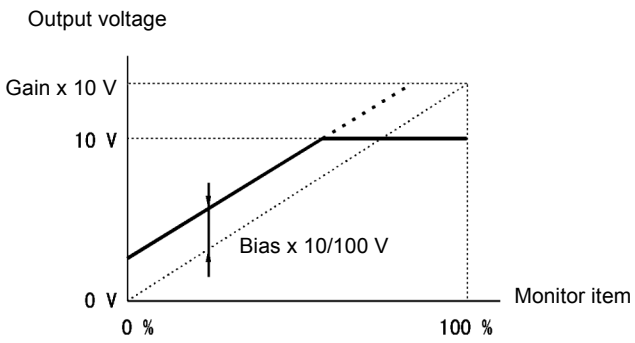

Fig 6.51 Monitor Output Adjustment

■Switching Analog Monitor Signal Levels

Monitor items corresponding to 0 to ±10 V output 0 to 10 V signals when the monitor value is positive (+), and 0 to -10 V signals when the monitor value is negative (-). For monitor items corresponding to 0 to ±10 V, refer to *Chapter 5 User Constants*.

INFO

You can select the signal levels separately for multi-function analog output terminals and analog output option terminals.

◆ Using Pulse Train Monitor Contents

This section explains pulse monitor constants.

■Related Constants

Constant Number	Name	Description	Setting Range	Factory Setting	Change during Operation	Control Methods		
						V/f	V/f with PG	Open Loop Vector
H6-06	Pulse train monitor selection	Select the pulse train monitor output items (value of the □□ part of U1-□□). There are two types of monitor items: Speed-related items and PID-related items.	1, 2, 5, 20, 24, 36	2	Yes	A	A	A
H6-07	Pulse train monitor scaling	Set the number of pulses output when speed is 100% in hertz. Set H6-06 to 2, and H6-07 to 0, to make the pulse train monitor output synchronously to the output frequency.	0 to 32000	1440 Hz	Yes	A	A	A

■Selecting Pulse Monitor Items

Output digital operator monitor items (U1-□□ [status monitor]) from pulse monitor terminal MP-SC. Refer to *Chapter 5 User Constants*, and set the □□ part of U1-□□ (Status monitor). The possible monitor selections are limited as follows: U1-01, 02, 05, 20, 24, 36.

■Adjusting the Pulse Monitor Items

Adjust the pulse frequency output from pulse monitor terminal MP-SC. Set the pulse frequency output when 100% frequency is output to H6-07.

Set H6-06 to 2, and H6-07 to 0, to output the frequency synchronous with the Inverter's U-phase output.

■Application Precautions

When using a pulse monitor constant, connect a peripheral device according to the following load conditions. If the load conditions are different, there is a risk of characteristic insufficiency or damage to the machinery.

Using a Sourcing Output

Output Voltage (Isolated) VRL (V)	Load Impedance (kΩ)
+5 V min.	1.5 kΩ min.
+8 V min.	3.5 kΩ min.
+10 V min.	10 kΩ min.

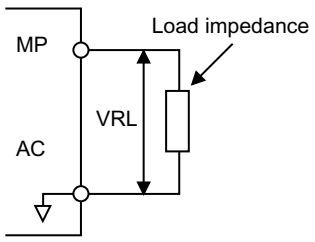

Using a Sinking Input

External Power Supply (V)	12 VDC±10%, 15 VDC±10%
Sink Current (mA)	16 mA Max

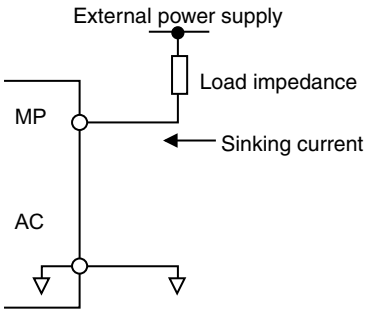

Individual Functions

This section explains the individual functions used in special applications.

◆ Using MEMOBUS Communications

You can perform serial communications with MEMOCON-series Programmable Controllers (PLCs) or similar devices using the MEMOBUS protocol.

■MEMOBUS Communications Configuration

MEMOBUS communications are configured using 1 master (PLC) and up to 31 slaves. Serial communications between master and slave are normally started by the master, and the slave responds.

The master performs signal communications with one slave at a time. Consequently, you must set the address of each slave beforehand, so the master can perform signal communications using that address. Slaves receiving commands from the master perform the specified function, and send a response to the master.

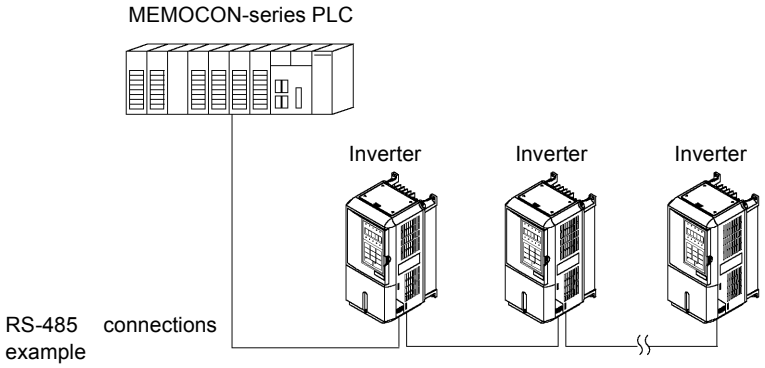

Fig 6.52 Example of Connections between PLC and Inverter

■Communications Specifications

The MEMOBUS communications specifications are shown in the following table.

Item	Specifications
Interface	RS-422, RS-485
Communications Cycle	Asynchronous (Start-stop synchronization)
Communications Parameters	Baud rate: Select from 1,200, 2,400, 4,800, 9,600, and 19,200 bps. Data length: 8 bits fixed Parity: Select from even, odd, or none. Stop bits: 1 bit fixed
Communications Protocol	MEMOBUS (RTU mode only)
Number of Connectable Units	31 units max. (when using RS-485)

■Communications Connection Terminal

MEMOBUS communications use the following terminals: S+, S-, R+, and R-. Set the terminating resistance by turning ON pin 1 of switch S1 for the last Inverter only, as seen from the PLC.

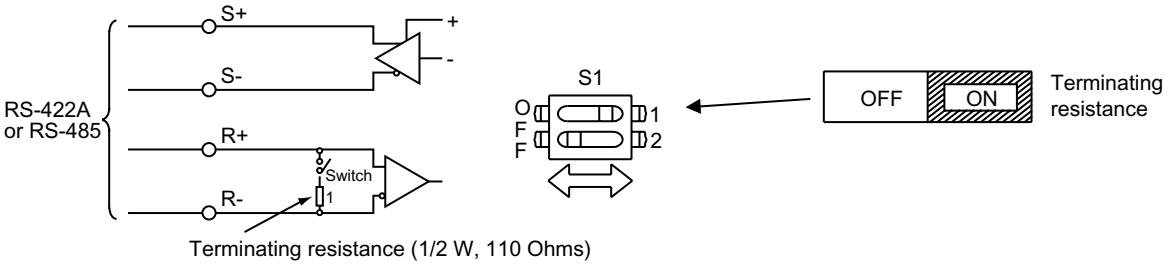

Fig 6.53 Communications Connection Terminal

IMPORTANT

1. Separate the communications cables from the main circuit cables and other wiring and power cables.
2. Use shielded cables for the communications cables, connect the shield cover to the Inverter earth terminal, and arrange the terminals so that the other end is not connected to prevent operating errors due to noise.
3. When using RS-485 communications, connect S+ to R+, and S- to R-, on the Inverter exterior.

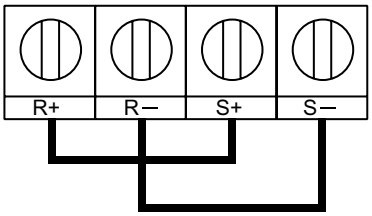

■Procedure for Communicating with the PLC

Use the following procedure to perform communications with the PLC.

1. Turn OFF the power supply turned and connect the communications cable between the PLC and the Inverter.
2. Turn ON the power supply.
3. Set the required communications constants (H5-01 to H5-07) using the Digital Operator.
4. Turn OFF the power supply, and check that the Digital Operator display has completely disappeared.
5. Turn ON the power supply once again.
6. Perform communications with the PLC.

INFO

Set the timer on the master to monitor response time from the slave. Set the master so that if the slave does not respond to the master within the set time, the same command message will be sent from the master again.

■Related Constants

Constant Number	Name	Description	Setting Range	Factory Setting	Change during Operation	Control Methods		
						V/f	V/f with PG	Open Loop Vector
b1-01	Reference selection	Set the frequency reference input method 0: Digital Operator 1: Control circuit terminal (analog input) 2: MEMOBUS communications 3: Option Card 4: Pulse train input	0 to 4	1	No	Q	Q	Q
b1-02	Operation method selection	Set the run command input method 0: Digital Operator 1: Control circuit terminal (sequence input) 2: MEMOBUS communications 3: Option Card	0 to 3	1	No	Q	Q	Q
H5-01	Station address	Set the Inverter station address.	0 to 20 *	1F	No	A	A	A
H5-02	Baud rate selection	Set the baud rate for 6CN MEMOBUS communications. 0: 1200 bps 1: 2400 bps 2: 4800 bps 3: 9600 bps 4: 19200 bps	0 to 4	3	No	A	A	A
H5-03	Communications parity selection	Set the parity for 6CN MEMOBUS communications. 0: No parity 1: Even parity 2: Odd parity	0 to 2	0	No	A	A	A
H5-04	Communication error detection selection	Set the stopping method for communications errors. 0: Deceleration to stop using deceleration time in C1-02 1: Coast to a stop 2: Emergency stop using deceleration time in C1-02 3: Continue operation	0 to 3	3	No	A	A	A
H5-05	Communications error detection selection	Set whether or not a communications time out is to be detected as a communications error. 0: Do not detect 1: Detect	0 or 1	1	No	A	A	A
H5-06	Send wait time	Set the time from the Inverter receiving data to when the Inverter starts to send.	5 to 65 ms	5 ms	No	A	A	A
H5-07	RTS control ON/OFF	Select to enable or disable RTS control. 0: Disabled (RTS is always ON) 1: Enabled (RTS turns ON only when sending)	0 or 1	1	No	A	A	A

* Set H5-01 to 0 to disable Inverter responses to MEMOBUS communications.

MEMOBUS communications can perform the following operations regardless of the settings in b1-01 and b1-02.

- Monitoring operation status from the PLC
- Setting and reading constants
- Resetting errors
- Inputting multi-function commands

An OR operation is performed between the multi-function commands input from the PLC and commands input from multi-function contact input terminals S3 to S7.

■Message Format

In MEMOBUS communications, the master sends commands to the slave, and the slave responds. The message format is configured for both sending and receiving as shown below, and the length of data packets is changed by the command (function) contents.

Slave address
Function code
Data
Error check

The space between messages must support the following.

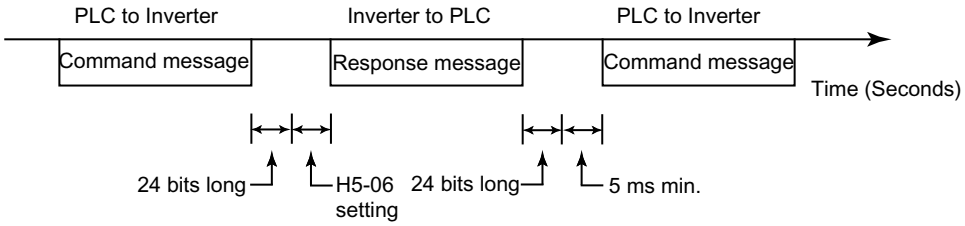

Fig 6.54 Message Spacing

Slave Address

Set the Inverter address from 0 to 32. If you set 0, commands from the master will be broadcast (i.e., the Inverter will not return responses).

Function Code

The function code specifies commands. There are three function codes, as shown below.

Function Code (Hexadecimal)	Function	Command Message		Response Message	
		Min. (Bytes)	Max. (Bytes)	Min. (Bytes)	Max. (Bytes)
03H	Read storage register contents	8	8	7	37
08H	Loop back test	8	8	8	8
10H	Write multiple storage registers	11	41	8	8

Data

Configure consecutive data by combining the storage register address (test code for a loop back address) and the data the register contains. The data length changes depending on the command details.

Error Check

Errors are detected during communications using CRC-16. Perform calculations using the following method.

1. The factory setting for CRC-16 communications is usually 0, but when using the MEMOBUS system, set the factory setting to 1 (i.e., set all 16 bits to 1).
2. Calculate CRC-16 using MSB as slave address LSB, and LSB as the MSB of the final data.
3. Also calculate CRC-16 for response messages from the slaves, and compare them to the CRC-16 in the response messages.

■MEMOBUS Message Example

An example of MEMOBUS command/response messages is given below.

Reading Storage Register Contents

Read the contents of the storage register only for specified quantities whose addresses are consecutive, starting from a specified address. The contents of the storage register are separated into higher place 8 bits and lower place 8 bits, and comprise the data within response messages in address order.

The following table shows message examples when reading status signals, error details, data link status, and frequency references from the slave 2 Inverter.

Command Message

Slave Address		02H
Function Code		03H
Start Address	Higher place	00H
	Lower place	20H
Quantity	Higher place	00H
	Lower place	04H
CRC-16	Higher place	45H
	Lower place	F0H

Response Message (During Normal Operation)

Slave Address		02H
Function Code		03H
Data quantity		08H
Lead storage register	Higher place	00H
	Lower place	65H
Next storage register	Higher place	00H
	Lower place	00H
Next storage register	Higher place	00H
	Lower place	00H
Next storage register	Higher place	01H
	Lower place	F4H
CRC-16	Higher place	AFH
	Lower place	82H

Response Message (During Error)

Slave Address		02H
Function Code		83H
Error code		03H
CRC-16	Higher place	F1H
	Lower place	31H

Loop back Test

The loop back test returns command messages directly as response messages without changing the contents to check the communications between the master and slave. You can set user-defined test code and data values.

The following table shows a message example when performing a loop back test with the slave 1 Inverter.

Command Message

Slave address		01H
Function code		08H
Test Code	Higher place	00H
	Lower place	00H
Data	Higher place	A5H
	Lower place	37H
CRC-16	Higher place	DAH
	Lower place	8DH

Response Message (During Normal Operation)

Slave address		01H
Function code		08H
Test Code	Higher place	00H
	Lower place	00H
Data	Higher place	A5H
	Lower place	37H
CRC-16	Higher place	DAH
	Lower place	8DH

Response Message (During Error)

Slave address		01H
Function code		89H
Error Code		01H
CRC-16	Higher place	86H
	Lower place	50H

Writing to Multiple Storage Registers

Write the specified data to each specified storage register from the specified addresses. The written data must be in the following order in the command message: Higher place 8 bits, then lower place 8 bits, in storage register address order.

The following table shows an example of a message when forward operation has been set at a frequency reference of 60.0 Hz in the slave 1 Inverter by the PLC.

Command Message

Slave Address		01H
Function Code		10H
Start Address	Higher place	00H
	Lower place	01H
Quantity	Higher place	00H
	Lower place	02H
No. of data		04H
Lead data	Higher place	00H
	Lower place	01H

Response Message (During Normal Operation)

Slave Address		01H
Function Code		10H
Start Address	Higher place	00H
	Lower place	01H
Quantity	Higher place	00H
	Lower place	02H
CRC-16	Higher place	10H
	Lower place	08H

Response Message (During Error)

Slave Address		01H
Function Code		90H
Error code		02H
CRC-16	Higher place	CDH
	Lower place	C1H

Next data	Higher place	02H
	Lower place	58H
CRC-16	Higher place	63H
	Lower place	39H

INFO

Set the number of data specified using command messages as quantity of specified messages x 2. Handle response messages in the same way.

■Data Tables

The data tables are shown below. The types of data are as follows: Reference data, monitor data, and broadcast data.

Reference Data

The reference data table is shown below. You can both read and write reference data.

Register No.	Contents		
0000H	Reserved		
0001H	Frequency reference		
	Bit 0	Run/stop command	1: Run 0: Stop
	Bit 1	Forward/reverse operation	1: Reverse 0: Forward
	Bit 2	External error	1: Error (EFO)
	Bit 3	Error reset	1: Reset command
	Bit 4	ComNet	
	Bit 5	ComCtrl	
	Bit 6	Multi-function input command 3	
	Bit 7	Multi-function input command 4	
	Bit 8	Multi-function input command 5	
	Bit 9	Multi-function input command 6	
	Bit A	Multi-function input command 7	
	Bits B to F	Not used	
0002H	Frequency reference (Set units using constant o1-03)		
0003H to 0005H	Not used		
0006H	PID target value		
0007H	Analog output 1 setting (-11 V/-726 to 11 V/726)		
0008H	Analog output 2 setting (-11 V/-726 to 11 V/726)		

Register No.	Contents	
0009H	Multi-function contact output setting	
	Bit 0	Contact output (Terminal M1-M2) 1: ON 0: OFF
	Bit 1	PHC1(Contact P1-PC) 1: ON 0: OFF
	Bit 2	PHC2(Contact P2-PC) 1: ON 0: OFF
	Bits 3 to 5	Not used
	Bit 6	Set error contact (terminal MA-MC) output using bit 7. 1: ON 0: OFF
	Bit 7	Error contact (terminal MA-MC) 1: ON 0: OFF
	Bits 8 to F	Not used
000AH to 000EH	Not used	
000FH	Reference selection settings	
	Bit 0	Not used
	Bit 1	Input PID target value 1: Enabled 0: Disabled
	Bits 3 to B	Not used
	C	Broadcast data terminal S5 input 1: Enabled 0: Disabled
	D	Broadcast data terminal S6 input 1: Enabled 0: Disabled
	E	Broadcast data terminal S7 input 1: Enabled 0: Disabled
	F	Not used

Note Write 0 to all unused bits. Also, do not write data to reserved registers.

Monitor Data

The following table shows the monitor data. Monitor data can only be read.

Register No.	Contents	
0020H	Inverter status	
	Bit 0	Operation 1: Operating 0: Stopped
	Bit 1	Reverse operation 1: Reverse operation 0: Forward operation
	Bit 2	Inverter startup complete 1: Completed 2: Not completed
	Bit 3	Error 1: Error
	Bit 4	Data setting error 1: Error
	Bit 5	Multi-function contact output (terminal M1 - M2) 1: ON 0: OFF
	Bit 6	Multi-function PHC output 1 (terminal P1 - PC) 1: ON 0: OFF
	Bit 7	Multi-function PHC output 2 (terminal P2 - PC) 1: ON 0: OFF
	Bits 8 to F	Not used

Register No.	Contents	
0021H	Error details	
	Bit 0	Over current (OC) Ground fault (GF)
	Bit 1	Main circuit over voltage (OV)
	Bit 2	Inverter overload (OL2)
	Bit 3	Inverter overheat (OH1, OH2)
	Bit 4	Injection brake transistor resistance overheat (rr, rH)
	Bit 5	Fuse blown (PUF)
	Bit 6	PID feedback reference lost (FbL)
	Bit 7	External error (EF, EFO)
	Bit 8	Hardware error (CPF)
	Bit 9	Motor overload (OL1) or over torque 1 (OL3) detected
	Bit A	PG broken wire detected (PGO), Overspeed (OS), Speed deviation (DEV)
	Bit B	Main circuit under voltage (UV) detected
	Bit C	Main circuit under voltage (UV1), control power supply error (UV2), inrush prevention circuit error (UV3), power loss
	Bit D	Missing output phase (LF)
	Bit E	MEMOBUS communications error (CE)
	Bit F	Operator disconnected (OPR)
0022H	Data link status	
	Bit 0	Writing data
	Bit 1	Not used
	Bit 2	Not used
	Bit 3	Upper and lower limit errors
	Bit 4	Data integrity error
	Bits 5 to F	Not used
0023H	Frequency reference	Monitors U1-01
0024H	Output frequency	Monitors U1-02
0025H	Output voltage reference (U1-06)	
0026H	Output current	U1-03
0027H	Output power	U1-08
0028H	Torque reference	U1-09
0029H	Not used	
002AH	Not used	

Register No.	Contents		
002BH	Sequence input status		
	Bit 0	Multi-function contact input terminal S1 1: ON 0: OFF	
	Bit 1	Multi-function contact input terminal S2 1: ON 0: OFF	
	Bit 2	Multi-function contact input terminal S3 1: ON 0: OFF	
	Bit 3	Multi-function contact input terminal S4 1: ON 0: OFF	
	Bit 4	Multi-function contact input terminal S5 1: ON 0: OFF	
	Bit 5	Multi-function contact input terminal S6 1: ON 0: OFF	
	Bit 6	Multi-function contact input terminal S7 1: ON 0: OFF	
	Bits 7 to F	Not used	
002CH	Inverter status		
	Bit 0	Operation	1: Operating
	Bit 1	Zero speed	1: Zero speed
	Bit 2	Frequency matching	1: Matched
	Bit 3	User-defined speed matching	1: Matched
	Bit 4	Frequency detection 1	1: Output frequency ≤ L4-01
	Bit 5	Frequency detection 2	Output frequency ≥ L4-01
	Bit 6	Inverter startup completed	1: Startup completed
	Bit 7	Low voltage detection 1: Detected	
	Bit 8	Base block	1: Inverter output base block
	Bit 9	Frequency reference mode	1: Not communications 0: Communications
	Bit A	Run command mode	1: Not communications 0: Communications
	Bit B	Over torque detection	1: Detected
	Bit C	Frequency reference lost	1: Lost
	Bit D	Retrying error	1: Retrying
	Bit E	Error (including MEMOBUS communications time-out) 1:Error occurred	
	Bit F	MEMOBUS communications time-out 1: Timed out	
002DH	Multi-function contact output status		
	Bit 0	Multi-function contact output (terminal M1-M2) 1: ON 0: OFF	
	Bit 1	Terminal function PHC output 1 (terminal P1-PC): 1: ON 0: OFF	
	Bit 2	Terminal function PHC output 2 (terminal P1-PC): 1: ON 0: OFF	
	Bits 3 to F	Not used	
002EH - 0030H	Not used		
0031H	Main circuit DC voltage		
0032H - 0037H	Not used		
0038H	PID feedback quantity (Input equivalent to 100%/Max. output frequency; 10/1%; without sign)		
0039H	PID input quantity (±100%/±Max. output frequency; 10/1%; with sign)		
003AH	PID output quantity (±100%/±Max. output frequency; 10/1%; with sign)		

Register No.	Contents	
003BH	CPU software number	
003CH	Flash software number	
003DH	Communications error details	
	Bit 0	CRC error
	Bit 1	Invalid data length
	Bit 2	Not used
	Bit 3	Parity error
	Bit 4	Overrun error
	Bit 5	Framing error
	Bit 6	Time-out
	Bits 7 to F	Not used
003EH	KVA setting	
003FH	Control method	

Note Communications error details are stored until an error reset is input (you can also reset while the Unit is operating).

Broadcast Data

The following table shows the broadcast data. You can also write this data.

Register Address	Contents	
0001H	Operation signal	
	Bit 0	Run command 1: Operating 0: Stopped
	Bit 1	Reverse operation command 1: Reverse 0: Forward
	Bits 2 and 3	Not used
	Bit 4	External error 1: Error (set using H1-01)
	Bit 5	Error reset 1: Reset command (set using H1-02)
	Bits 6 to B	Not used
	Bit C	Multi-function contact input terminal S5 input
	Bit D	Multi-function contact input terminal S6 input
	Bit E	Multi-function contact input terminal S7 input
	Bit F	Not used.
0002H	Frequency reference	30000/100%

Note Bit signals not defined in the broadcast operation signals use local node data signals continuously.

■ENTER Command

When writing constants to the Inverter from the PLC using MEMOBUS communications, the constants are temporarily stored in the constant data area in the Inverter. To enable these constants in the constant data area, use the ENTER command.

There are two types of ENTER commands: ENTER commands that enable constant data in RAM, and ENTER commands that write data to EEPROM (non-volatile memory) in the Inverter at the same time as enabling data in RAM.

The following table shows the ENTER command data. ENTER command data can only be written.

The ENTER command is enabled by writing 0 to register number 0900H or 0901H.

Register No.	Contents
0900H	Write constant data to EEPROM
0910H	Constant data is not written to EEPROM, but refreshed in RAM only.

INFO

The maximum number of times you can write to EEPROM using the Inverter is 100 thousand. Do not frequently execute ENTER commands (0900H) written to EEPROM.
The ENTER command registers are write-only. Consequently, if reading these registers, the register address will become invalid (Error code: 02H).

■Error Codes

The following table shows MEMOBUS communications error codes.

Error Code	Contents
01H	Function code error A function code other than 03H, 08H, or 10H has been set by the PLC.
02H	Invalid register number error • The register address you are attempting to access is not recorded anywhere. • With broadcast sending, a start address other than 0000H, 0001H, or 0002H has been set.
03H	Invalid quantity error • The number of data packets being read or written is outside the range 1 to 16. • In write mode, the number of data packets in the message is not No. of packets x 2.
21H	Data setting error • A simple upper limit or lower limit error has occurred in the control data or when writing constants. • When writing constants, the constant setting is invalid.
22H	Write mode error • Attempting to write constants from the PLC during operation. • Attempting to write via ENTER commands from the PLC during operation. • Attempting to write constants other than A1-00 to A1-05, E1-03, or 02-04 when warning alarm CPF03 (defective EEPROM) has occurred. • Attempting to write read-only data.
23H	Writing during main circuit under voltage (UV) error • Writing constants from the PLC during UV (main circuit under voltage) alarm. • Writing via ENTER commands from the PLC during UV (main circuit under voltage) alarm.
24H	Writing error during constants processing Attempting to write constants from the PLC while processing constants in the Inverter.

■Slave Not Responding

In the following cases, the slave will ignore the write function. If the slave address specified in the command message is 0, all slaves execute the write function, but do not return response messages to the master.

- When a communications error (overrun, framing, parity, or CRC-16) is detected in the command message.
- When the slave address in the command message and the slave address in the Inverter do not agree.
- When the data that configures the message and the data time length exceeds 24 bits.
- When the command message data length is invalid.

Application Precautions

Set a timer in the master to monitor response time from the slaves. Make the setting so that if no response is sent to the master from the slave within the set time, the same command message is sent again from the master.

■Self-Diagnosis

The Inverter has a built-in function for self-diagnosing the operations of serial communications interface circuits. This function is called the self-diagnosis function. The self-diagnosis function connects the communications parts of the send and receive terminals, receives the data sent by the Inverter, and checks if communications are being performed normally.

Perform the self-diagnosis function using the following procedure.

1. Turn ON the power supply to the Inverter, and set 67 (communications test mode) in constant H1-05 (Terminal S7 Function Selection).
2. Turn OFF the power supply to the Inverter.
3. Perform wiring according to the following diagram while the power supply is turned OFF.
4. Turn ON the terminating resistance. (Turn ON pin 1 on DIP switch 1.)
5. Turn ON the power supply to the Inverter again.

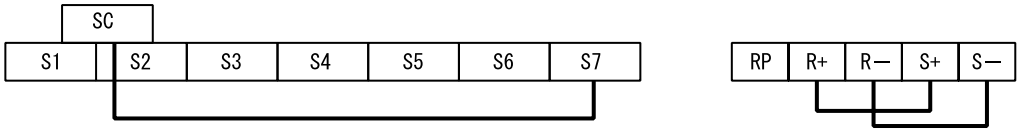

Fig 6.55 Details of Communications Terminals

During normal operation, the Digital Operator displays the frequency reference value.

If an error occurs, a CE (MEMOBUS communications error) alarm will be displayed on the Digital Operator, the error contact output will be turned ON, and the Inverter operation ready signal will be turned OFF.

◆ Using the Timer Function

Multi-function contact input terminals S3 to S7 can be designated as timer function input terminals, and multi-function output terminals M1-M2, P1-PC, and P2-PC can be designated as timer function output terminals. By setting the delay time, you can erase chattering from the sensors and switches.

- Set one of the constants H1-01 to H1-05 (multi-function contact input terminal S3 to S7) to 18 (timer function input).
- Set H2-01 to H2-03 (multi-function output terminals M1-M2, P1-PC, and P2-PC function selection) to 12 (timer function output).

■Related Constants

Constant Number	Name	Description	Setting Range	Factory Setting	Change during Operation	Control Methods		
						V/f	V/f with PG	Open Loop Vector
b4-01	Timer function ON-delay time	Set the timer function output ON delay time (dead band) for the timer function input in 1-second units. Enabled when a timer function is set in H1-□□ and H2-□□.	0.0 to 300.0	0.0 s	No	A	A	A
b4-02	Timer function OFF-delay time	Set the timer function output OFF delay time (dead band) for the timer function input in 1-second units. Enabled when the timer function is set in H1-□□ and H2-□□.	0.0 to 300.0	0.0 s	No	A	A	A

■Setting Example

When the timer function input ON time is longer than the value set in b4-01, the timer output function is turned ON. When the timer function input OFF time is longer than the value set in b4-02, the timer output function is turned OFF. An example of timer function operation is given in the following diagram.

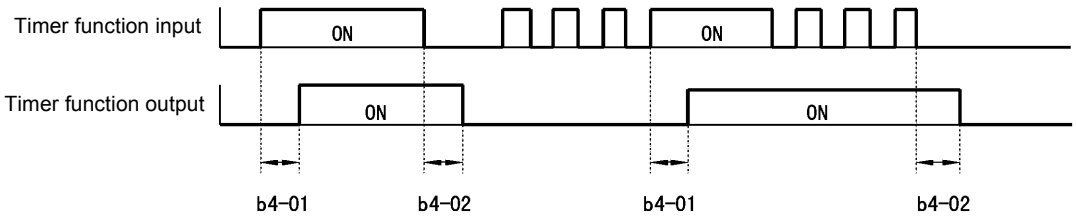

Fig 6.56 Timer Function Operation Example

◆ Using PID Control

PID control is a method of making the feedback value (detection value) match the set target value. By combining proportional control (P), integral control (I), and derivative control (D), you can even control targets (machinery) with play time.

The characteristics of the PID control operations are given below.

P control	Outputs the amount of operation proportional to the deviation. You cannot, however, set the deviation to zero using P control alone.
I control	Outputs the amount of operation that integrates the deviation. Used for matching feedback value to the target value. I control is not suited, however, to rapid variations.
D control	Outputs the amount of operation derived from the deviation. Can respond promptly to rapid variations.

■PID Control Operation

To understand the differences between each PID control operation (P, I, and D, the variation in the amount of operation (output frequency) is as shown in the following diagram when the deviation (i.e., the difference between the target value and feedback value) is fixed.

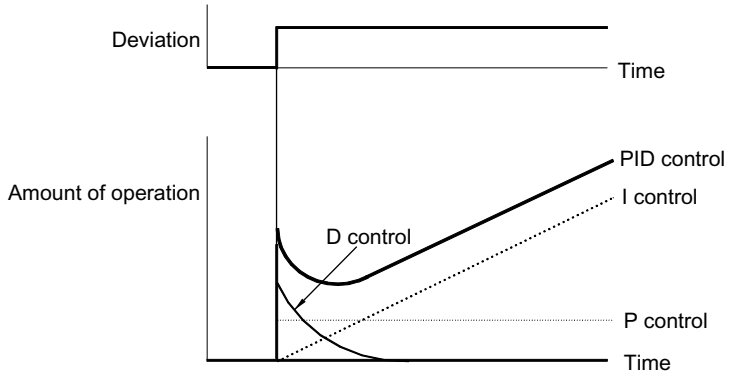

Fig 6.57 PID Control Operation

■PID Control Applications

The following table shows examples of PID control applications using the Inverter.

Application	Control Details	Example of Sensor Used
Speed Control	• Feeds back machinery speed information, and matches speed to the target value. • Inputs speed information from other machinery as the target value, and performs synchronous control using the actual speed feedback.	Tachometer generator
Pressure Control	Feeds back pressure information, and performs constant pressure control.	Pressure sensor
Flow Rate Control	Feeds back flow rate information, and controls the flow rate highly accurately.	Flow rate sensor

Application	Control Details	Example of Sensor Used
Temperature Control	Feeds back temperature information, and performs temperature adjustment control by rotating the fan.	• Thermocouple • Thermistor

■Related Constants

Constant Number	Name	Description	Setting Range	Factory Setting	Change during Operation	Control Methods		
						V/f	V/f with PG	Open Loop Vector
b5-01	PID control mode selection	0: Disabled 1: Enabled (Deviation is D-controlled.) 2: Enabled (Feedback value is D-controlled.) 3: PID control enabled (frequency reference + PID output, D control of deviation) 4: PID control enabled (frequency reference + PID output, D control of feedback value).	0 to 4	0	No	A	A	A
b5-02	Proportional gain (P)	Sets P-control proportional gain as a percentage. P-control is not performed when the setting is 0.00.	0.00 to 25.00	1.00	Yes	A	A	A
b5-03	Integral (I) time	Sets I-control integral time in 1-second units. I-control is not performed when the setting is 0.0.	0.0 to 360.0	1.0 s	Yes	A	A	A
b5-04	Integral (I) limit	Sets the I-control limit as a percentage of the maximum output frequency.	0.0 to 100.0	100.0%	Yes	A	A	A
b5-05	Derivative (D) time	Sets D-control derivative time in 1-second units. D-control is not performed when the setting is 0.00.	0.00 to 10.00	0.00 s	Yes	A	A	A
b5-06	PID limit	Sets the limit after PID-control as a percentage of the maximum output frequency.	0.0 to 100.0	100.0%	Yes	A	A	A
b5-07	PID offset adjustment	Sets the offset after PID-control as a percentage of the maximum outut frequency.	-100.0 to +100.0	0.0%	Yes	A	A	A
b5-08	PID primary delay time constant	Sets the time constant for low pass filter for PID-control outputs in 1-second units. Not usually necessary to set.	0.00 to 10.00	0.00 s	Yes	A	A	A
b5-09	PID output characteristics selection	Select forward/reverse for PID output. 0: PID output is forward. 1: PID output is reverse (highlights the output code)	0 or 1	0	No	A	A	A
b5-10	PID output gain	Sets output gain.	0.0 to 25.0	1.0	No	A	A	A
b5-11	PID reverse output selection	0: 0 limit when PID output is negative. 1: Reverse when PID output is negative. 0 limit when reverse prohibit is selected using b1-04.	0 or 1	0	No	A	A	A
b5-12	Selection of PID feedback command loss detection	0: No detection of loss of PID feedback 1: Detection of loss of PID feedback. Operation continues during detection, with the malfunctioning contact not operating. 2: Detection of loss of PID feedback. Coasts to stop during detection, and fault contact operates.	0 to 2	0	No	A	A	A
b5-13	PID feedback command loss detection level	Set the PID feedback loss detection level as a percent, with the maximum output frequency at 100%.	0 to 100	0%	No	A	A	A
b5-14	PID feedback command loss detection time	Sets the PID feedback loss detection level in s units.	0.0 to 25.5	1.0 s	No	A	A	A
b5-15	PID sleep function operation level	Set the PID sleep function start level as a frequency.	0.0 to 400.0	0.0 Hz	No	A	A	A
b5-16	PID sleep operation delay time	Set the delay time until the PID sleep function starts in seconds.	0.0 to 25.5	0.0 s	No	A	A	A
b5-17	Accel/decel time for PID reference	Set the accel/decel time for PID reference in seconds.	0.0 to 25.5	0.0 s	No	A	A	A
H6-01	Pulse train input function selection	0: Frequency reference 1: PID feedback value 2: PID target value	0 to 2	0	No	A	A	A

Constant Number	Name	Description	Output Signal Level During Multi-Function Analog Output	Min. Unit	Control Methods		
					V/f	V/f with PG	Open Loop Vector
U1-24	PID feedback value	Monitors the feedback value when PID control is used. The input for the max. frequency corresponds to 100%.	10 V: Max. frequency (0 to ± 10 V possible)	0.01%	A	A	A
U1-36	PID input volume	PID feedback volume Given as maximum frequency/100%	10 V: Max. frequency (0 to ± 10 V possible)	0.01%	A	A	A
U1-37	PID output volume	PID control output Given as maximum frequency/100%	10 V: Max. frequency (0 to ± 10 V possible)	0.01%	A	A	A
U1-38	PID command	PID command + PID command bias Given as maximum frequency/100%	10 V: Max. frequency	0.01%	A	A	A

Multi-Function Contact Inputs (H1-01 to H1-05)

Set Value	Function	Control Methods		
		V/f	V/f with PG	Open loop Vector
19	PID control disable (ON: PID control disabled)	Yes	Yes	Yes
30	PID control integral reset (reset when reset command is input or when stopped during PID control)	Yes	Yes	Yes
31	PID control integral hold (ON: Integral hold)	Yes	Yes	Yes
34	PID soft starter	Yes	Yes	Yes
35	PID input characteristics switch	Yes	Yes	Yes

Multi-Function Analog Input (H3-09)

Set Value	Function		Control Methods		
			V/f	V/f with PG	Open loop Vector
B	PID feedback	Max. output frequency	Yes	Yes	Yes
C	PID target value	Max. output frequency	Yes	Yes	Yes

■PID Control Methods

There are four PID control methods. Select the method by setting constant b5-01.

Set Value	Control Method
1	PID output becomes the Inverter output frequency, and D control is used in the difference between PID target value and feedback value.
2	PID output becomes the Inverter output frequency, and D control is used in the PID feedback value.
3	PID output is added as compensation value of the Inverter output frequency, and D control is used in the difference between PID target value and feedback value.
4	PID output is added as compensation value of the Inverter output frequency, and D control is used in the PID feedback value.

■PID Input Methods

Enable PID control using constant b5-01, and set the PID target value and PID feedback value.

PID Target Value Input Methods

Select the PID control target value input method according to the setting in b1-01 (Reference Selection). Normally, the frequency reference selected in b1-01 is the PID target value, but you can also set the PID target value as shown in the following table.

PID Target Input Method	Setting Conditions
Multi-Function Analog Terminal A2 Input	Set H3-09 to C (PID target value). Also, be sure to set H6-01 (pulse train input function selection) to 1 (PID feedback value).
MEMOBUS register 0006H	Set MEMOBUS bit 1 in register address 000FH to 1 (enable/disable PID target value from communications) to be able to use register number 0006H as the PID target value.
Pulse train input	Set H6-01 to 2 (PID target value).

PID Feedback Input Methods

Select one of the following PID control feedback input methods.

Input Method	Setting Conditions
Multi-function analog input	Set H3-09 (Multi-function Analog Input Terminal A2 Selection) to B (PID feedback).
Pulse train input	Set H6-01 to 1 (PID feedback).

INFO

Adjust PID target value and PID feedback value using the following items.

- Analog input: Adjust using the analog input terminal gain and bias.
- Pulse train input: Adjust using pulse train scaling, pulse train input gain, and pulse train input bias.

■PID Adjustment Methods

Use the following procedure to adjust PID while performing PID control and measuring the response waveform.

1. Set b5-01 (PID Control Mode Selection) to 1 or 2 (PID control enabled).
2. Increase b5-02 (Proportional Gain (P)) to within a range that does not vibrate.
3. Reduce b5-03 (Integral (I) time) to within a range that does not vibrate.
4. Increase b5-05 (Derivative (D) time) to within a range that does not vibrate.

■PID Fine Adjustment Methods

This section explains the fine adjustment of PID after setting the PID control constants.

Suppressing Overshoot

If overshoot occurs, reduce derivative time (D), and increase integral time (I).

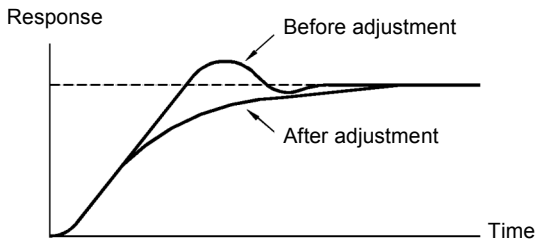

Set a Rapidly Stabilizing Control Condition

To rapidly stabilize the control even if overshoot occurs, reduce integral time (I), and lengthen derivative time (D).

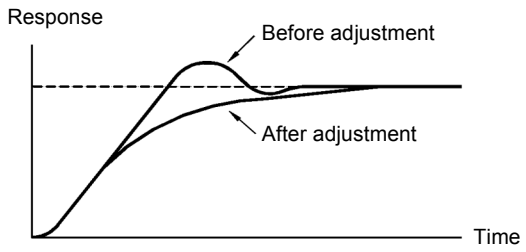

Suppressing Long-cycle Vibration

If vibration occurs with a longer cycle than the integral time (I) set value, the integral operation is too strong. Lengthen the integral time (I) to suppress the vibration.

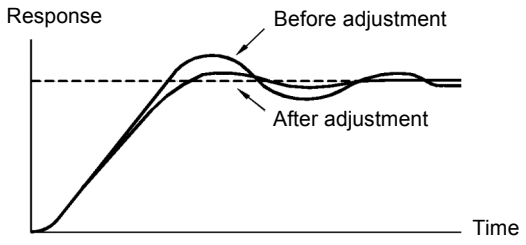

Suppressing Short Cycle Vibration

If vibration occurs when the vibration cycle is short, and the cycle is almost identical to the derivative time (D) set value, the differential operation is too strong. Shorten the derivative time (D) to suppress the vibration.

If vibration continues even when the derivative time (D) is set to 0.00 (D control disabled), reduce the proportional gain (P), or increase the PID primary delay time constant.

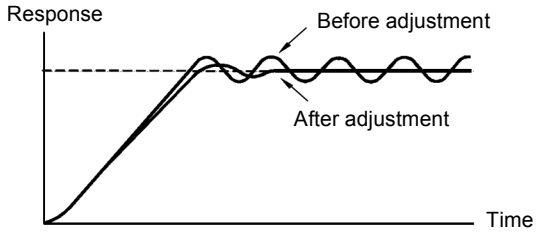

■Setting Precautions

- In PID control, the b5-04 constant is used to prevent the calculated integral control value from exceeding a specified amount. When the load varies rapidly, Inverter response is delayed, and the machine may be damaged or the motor may stall. In this case, reduce the set value to speed up Inverter response.
- The b5-06 constant is used to prevent the arithmetic operation following the PID control calculation from exceeding a specified amount. Set taking the maximum output frequency to be 100%.
- The b5-07 constant is used to adjust PID control offset. Set in increments of 0.1%, taking the maximum output frequency to be 100%.
- Set the low pass filter time constant for the PID control output in b5-08. Enable this constant to prevent machinery resonance from occurring when machinery adhesive abrasion is great, or rigidity is poor. In this case, set the constant to be greater than the resonance frequency cycle. Increase this time constant to reduce Inverter responsiveness.
- Using b5-09, you can invert the PID output polarity. Consequently, if you increase the PID target value, you can apply this constant to applications to lower the Inverter output frequency.
- Using b5-10, you can apply gain to the PID control output. Enable this constant to adjust the amount of compensation if adding PID control output to the frequency reference as compensation.
- When PID control output is negative, you can use constant b5-11 to invert the Inverter's output. When b1-04 (Prohibition of Reverse Operation) is set to 1 (enabled), however, PID output limit is 0.
- With the Inverter, by setting an independent acceleration/deceleration time in constant b5-17, you can increase or decrease the PID target value using the acceleration/deceleration time. The acceleration/deceleration function (constant C1) used normally, however, is allocated after PID control, so depending on the settings, resonance with PID control and hunting in the machinery may occur. If this happens, reduce constant C1 until hunting does not occur, and maintain the acceleration/deceleration time using b5-17. Also, you can disable the set value in b5-17 from the external terminals during operation using multi-function input set value 34 (PID soft starter).

■PID Control Block

The following diagram shows the PID control block in the Inverter.

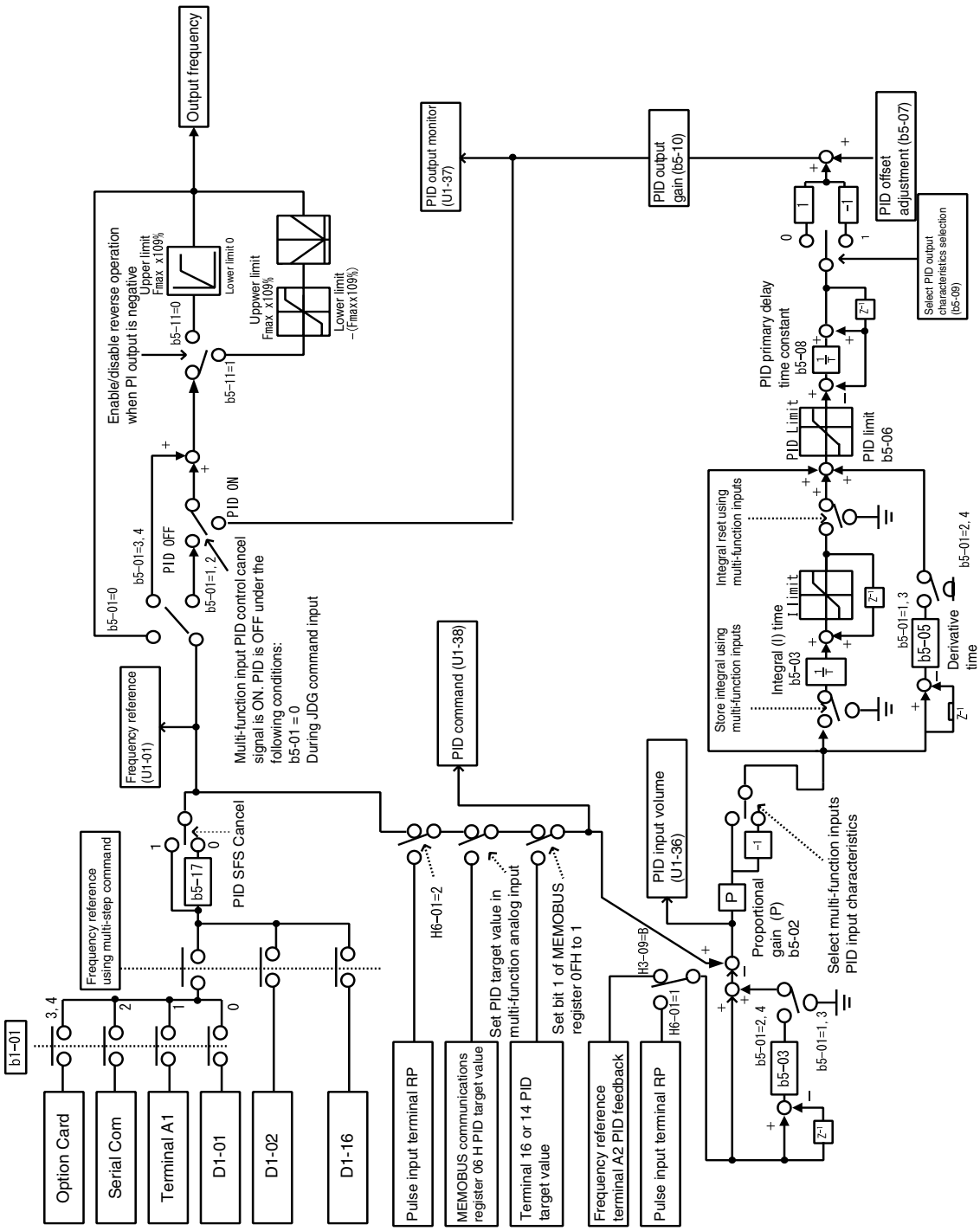

Fig 6.58 PID Control Block

■PID Feedback Loss Detection

When performing PID control, be sure to use the PID feedback loss detection function. If PID feedback is lost, the Inverter output frequency may accelerate to the maximum output frequency.

When setting b5-12 to 1 and the status of the PID feedback value detection level in b5-13 is insufficient and continues for the time set in b5-14, an FbL (PID feedback reference lost) alarm will be displayed on the Digital Operator and Inverter operation will continue.

When b5-12 is set to 2, an FbL (PID feedback reference lost) error alarm will be displayed on the Digital Operator, the error contact will operate, and Inverter operation will be stopped.

The time chart for PID feedback loss detection (set b5-12 to 2) is shown below.

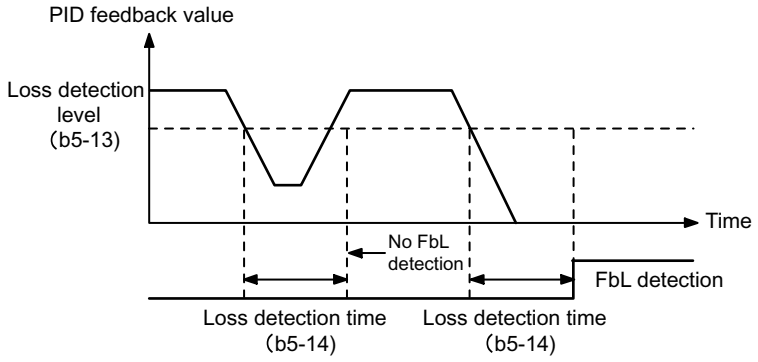

Fig 6.59 PID Feedback Loss Detection Time Chart

■PID Sleep

The PID sleep function stops the Inverter when the PID sleep function delay time continues while the PID control target value is at an insufficient level to operate the PID sleep function. When the PID sleep delay time continues and the PID control target value is above the PID sleep function operation level, Inverter operation will automatically resume.

When PID control is disabled, the PID sleep function is also disabled. When using the PID sleep function, select decelerate to stop or coast to stop as the stopping method.

The PID sleep time chart is shown below.

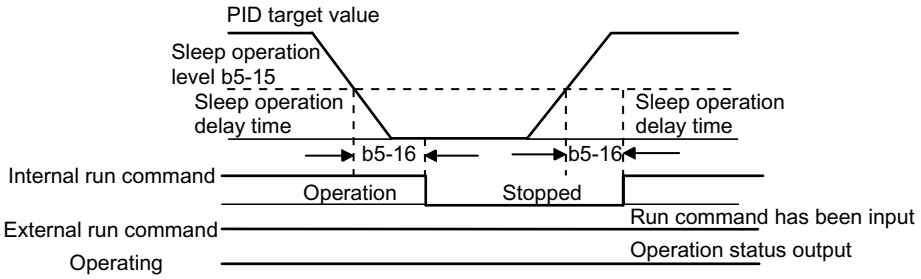

Fig 6.60 PID Sleep Time Chart

◆ Energy-saving

To perform energy saving, set b8-01 (Energy Saving Mode Selection) to 1. Energy-saving control can be performed using both V/f control and open loop vector control. The constants to be adjusted are different for each. In V/f control, adjust b8-04 to b8-06, and in open loop vector, adjust b8-02 and b8-03.

■Related Constants

Constant Number	Name	Details	Setting Range	Factory Setting	Change During Operation	Control Methods		
						V/f	V/f with PG	Open Loop Vector
b8-01	Energy-saving mode selection	Select whether to enable or disable energy-saving control. 0: Disable 1: Enable	0 or 1	0	No	A	A	A
b8-02	Energy-saving gain	Set the energy-saving gain with the open loop vector control method.	0.0 to 10.0	0.7 *1	Yes	No	No	A
b8-03	Energy-saving filter time constant	Set the energy-saving filter time constant with the open loop vector control method.	0.00 to 10.0	0.50 s *2	Yes	No	No	A
b8-04	Energy-saving coefficient	Set the maximum motor efficiency value. Set the motor rated capacity in E2-11, and adjust the value by 5% at a time until output power reaches a minimum value.	0.0 to 655.00*3	*4	No	A	A	No
b8-05	Power detection filter time constant	Set the time constant for output power detection.	0 to 2000	20 ms	No	A	A	No
b8-06	Search operation voltage limiter	Set the limit value of the voltage control range during search operation. Perform search operation to optimize operations using minute variations in voltage using energy-saving control. Set to 0 to disable the search operation. 100% is the motor base voltage.	0 to 100	0%	No	A	A	No

* 1. The factory setting is 1.0 when using V/f control with PG.
* 2. The factory setting is 2.00 s when Inverter capacity is 55 kW min.
* 3. The same capacity as the Inverter will be set by initializing the constants.
* 4. The factory settings depend on the Inverter capacity.

No. Constant No.	Name	Details	Setting Range	Factory Setting	Change During Operation	Control Methods		
						V/f	V/f with PG	Open loop Vector
E2-02	Motor rated slip	Sets the motor rated slip in hertz. These set values will become the reference values for slip compensation. This constant is automatically set during auto tuning.	0.00 to 20.00	2.90 Hz *	No	A	A	A
E2-11	Motor rated output	Set the rated output of the motor in units of 0.01 kW. This constant is automatically set during auto tuning.	0.00 to 650.00	0.40 *	No	Q	Q	Q

* Factory settings depend on Inverter capacity. (The values shown are for a 200 V Class Inverter for 0.4 kW.)

■Adjusting Energy-saving Control

The method of adjustment during energy-saving control operations differs depending on the control method. Refer to the following when making adjustments.

V/f Control Method

In V/f control method, the voltage for optimum motor efficiency is calculated and becomes the output voltage reference.

- b8-04 (Energy-saving Coefficient) is set at the factory for motor use applied to the Inverter. If the motor capacity differs from the motor applied to the Inverter, set the motor capacity in E2-11 (Motor Rated Output). Also, adjust the output voltage in steps of 5 until it reaches minimum. The larger the energy-saving coefficient, the greater the output voltage.
- To improve response when the load fluctuates, reduce the power detection filter time constant b8-05. If b8-05 is set too small, however, motor rotations when the load is light may become unstable.
- Motor efficiency varies due to temperature fluctuations and differences in motor characteristics. Consequently, control motor efficiency online to optimize efficiency by causing minute variations in voltage using the search operation. Constant b8-06 (Search Operation Voltage Limiter) controls the range that control the voltage using the search operation. For 200 V Class Inverters, set the range to 100%/200 V, and for 400 V Class Inverters, set the range to 100%/400 V. Set to 0 to disable the search operation.

Open loop vector control

In open loop vector control, control the slip frequency so that motor efficiency is maximized.

- Taking the motor rated slip for the base frequency as optimum slip, calculate the optimum slip for motor efficiency for each frequency. In vector control, be sure to perform autotuning, and set the motor rated slip.
- If the motor performs hunting when using energy-saving control in vector control, reduce the set value in b8-02 (Energy-saving Gain), or increase the set value in b8-03 (Energy-saving Filter Time Constant).

◆ Setting Motor Constants

In vector control method, the motor constants are set automatically using auto tuning. If auto tuning does not complete normally, set them manually.

■Related Constants

Constant Number	Name	Description	Setting Range	Factory Setting	Change during Operation	Control Methods		
						V/f	V/f with PG	Open Loop Vector
E2-01	Motor rated current	Sets the motor rated current in 1 A units. These set values will become the reference values for motor protection, torque limits and torque control. This constant is automatically set during autotuning.	0.32 to 6.40 *2	1.90 A *1	No	Q	Q	Q
E2-02	Motor rated slip	Sets the motor rated slip in Hz units. These set values will become the reference values for slip compensation. This constant is automatically set during autotuning.	0.00 to 20.00	2.90 Hz *1	No	A	A	A
E2-03	Motor no-load current	Sets the motor no-load current in 1 A units. This constant is automatically set during autotuning.	0.00 to 1.89 *3	1.20 A *1	No	A	A	A
E2-04	Number of motor poles (Number of poles)	Sets the number of motor poles. This constant is automatically set during autotuning.	2 to 48	4 poles	No	No	Q	No
E2-05	Motor line-to-line resistance	Sets the motor phase-to-phase resistance in Ω units. This constant is automatically set during autotuning.	0.000 to 65.000	9.842 Ω *1	No	A	A	A
E2-06	Motor leak inductance	Sets the voltage drop due to motor leakage inductance as a percentage of the motor rated voltage. This constant is automatically set during autotuning.	0.0 to 40.0	18.2%	No	No	No	A
E2-07	Motor iron saturation coefficient 1	Sets the motor iron saturation coefficient at 50% of magnetic flux. This constant is automatically set during autotuning.	0.00 to 0.50	0.50	No	No	No	A
E2-08	Motor iron saturation coefficient 2	Sets the motor iron saturation coefficient at 75% of magnetic flux. This constant is automatically set during autotuning.	0.00 to 0.75	0.75	No	No	No	A
E2-10	Motor iron loss for torque compensation	Sets motor iron loss in W units.	0 to 65535	14 W *1	No	A	A	No

Note All factory-set constants are for a Yaskawa standard 4-pole motor.

* 1. The factory settings depend on Inverter capacity (the values shown are for a 200 V Class Inverter for 0.4 kW).

* 2. The setting range is 10% to 200% of the Inverter rated output current (the values shown are for a 200 V Class Inverter for 0.4 kW).

* 3. The setting range depends on Inverter capacity (the values shown are for a 200 V Class Inverter for 0.4 kW).

■Manual Motor Constant Setting Methods

The motor constants settings methods are given below. Make (enter) settings referring to the motor test report.

Motor Rated Voltage Setting

Set E2-01 to the rated current on the motor nameplate.

Motor Rated Slip Setting

Set E2-02 to the motor rated slip calculated from the number of rated rotations on the motor nameplate.

Amount of motor rated slip = Motor rated frequency (Hz) - No. of rated rotations (r/min) x No. of motor poles/120.

Motor No-Load Current Setting

Set E2-03 to the motor no-load current using the rated voltage and rated frequency. The motor no-load current is not normally written on the motor nameplate. Consult the motor manufacturer.

Factory setting is the no-load current value for a standard Yaskawa 4-pole motor.

Number of Motor Poles Setting

E2-04 is displayed only when V/f control method with PG is selected. Set the number of motor poles (number of poles) as written on the motor nameplate.

Motor Line-to-Line Resistance Setting

E2-05 is set automatically when performing motor line-to-line resistance auto tuning. When you cannot perform tuning, consult the motor manufacturer for the line-to-line resistance value. Calculate the resistance from the line-to-line resistance value in the motor test report using the following formula, and then make the setting accordingly.

- E-type isolation: [Line-to line resistance (Ω) at 75°C of test report] × 0.92 (Ω)
- B-type isolation: [Line-to line resistance (Ω) at 75°C of test repor]t × 0.92 (Ω)
- F-type isolation: [Line-to line resistance (Ω) at 115°C of test report] × 0.87 (Ω)

Motor Leak Inductance Setting

Set the amount of voltage drop due to motor leak inductance in E2-06 using the percentage over the motor rated voltage. Make this setting when the high-speed motor inductance is small. If the inductance is not written on the motor nameplate, consult the motor manufacturer.

Motor Iron Saturation Coefficients 1 and 2 Settings

E2-07 and E2-08 are set automatically using auto tuning.

Motor Iron Loss for Torque Compensation Setting

E2-10 is displayed only when in V/f control method. To increase the torque compensation accuracy when in V/f control method, set the motor iron loss in Watts.

◆ Setting the V/f Pattern

In V/f control method, you can set the Inverter input voltage and the V/f pattern as the need arises.

■Related Constants

Constant Number	Name	Description	Setting Range	Factory Setting	Change during Operation	Control Methods		
						V/f	V/f with PG	Open Loop Vector
E1-01	Input voltage setting	Set the Inverter input voltage in 1 volt. This setting is used as a reference value in protection functions.	155 to 255 *1	200 V *1	No	Q	Q	Q
E1-03	V/f pattern selection	0 to E: Select from the 15 preset V/f patterns. F: Custom user-set patterns (Application for settings E1-04 to E1-10.)	0 to F	F	No	Q	Q	No
E1-04	Max. output frequency (FMAX)	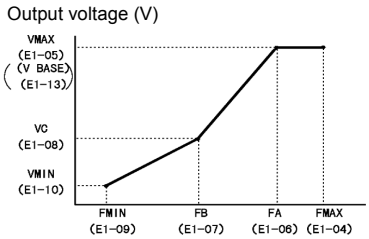	40.0 to 400.0 *5	60.0 Hz	No	Q	Q	Q
E1-05	Max. voltage (VMAX)		0.0 to 255.0 *1	200.0 V *1	No	Q	Q	Q
E1-06	Base frequency (FA)		0.0 to 400.0	60.0 Hz	No	Q	Q	Q
E1-07	Mid. output frequency		0.0 to 255.0 *1	3.0 Hz *2	No	A	A	A
E1-08	Mid. output frequency voltage		0.0 to 400.0	11.0 V *1 *2	No	A	A	A
E1-09	Min. output frequency (FMIN)	To set V/f characteristics in a straight line, set the same values for E1-07 and E1-09. In this case, the setting for E1-08 will be disregarded. Always ensure that the four frequencies are set in the following manner: E1-04 (FMAX) ≥ E1-06 (FA) >E1-07 (FB) ≥ E1-09 (FMIN)	0.0 to 400.0	0.5 Hz *2	No	Q	Q	Q
E1-10	Min. output frequency voltage		0.0 to 255.0 *1	2.0 V *1 *2	No	A	A	A
E1-11	Mid. output frequency 2	Set only to fine-adjust V/f for the output range. Normally, this setting is not required.	0.0 to 400.0	0.0 Hz *3	No	A	A	A
E1-12	Mid. output frequency voltage 2		0.0 to 255.0 *1	0.0 V *3	No	A	A	A
E1-13	Base voltage		0.0 to 255.0 *1	0.0 V *4	No	A	A	Q

* 1. These are values for a 200 V Class Inverter. Values for a 400 V Class Inverter are double.
* 2. The factory setting will change when the control method is changed. (Open loop vector control factory settings are given.)
* 3. The contents of constants E1-11 and E1-12 are ignored when set to 0.00.
* 4. E1-13 is set to the same value as E1-05 by auto tuning.
* 5. When C6-01 is set to 0, the upper limit of the setting range is 150.0 Hz.

■Setting Inverter Input Voltage

Set the Inverter input voltage correctly in E1-01 to match the power supply voltage. This set value will be the standard value for the protection function and similar functions.

■Setting V/f Pattern

Set the V/f pattern in E1-03. There are two methods of setting the V/f pattern: Select one of the 15 pattern types (set value: 0 to E) that have been set beforehand, or set a user-defined V/f pattern (set value: F).

The factory setting for E1-03 is F. The contents of E1-03 when factory-set to F are the same as when E1-03 is set to 1.

To select one of the existing patterns, refer to the following table.

Characteristic	Application	Set Value	Specifications
Constant Torque Characteristic	This pattern is used in general applications. Used when the load torque is fixed, regardless of rotation speed, for linear transport systems.	0	50 Hz specifications
		1 (F)	60 Hz specifications
		2	60 Hz specifications, voltage saturation at 50 Hz
		3	72 Hz specifications, voltage saturation at 60 Hz
Variable torque characteristic	This pattern is used for loads with torque proportional to two or three times the rotation speed, such as fans and pumps.	4	50 Hz specifications,× 3 decrement
		5	50 Hz specifications, × 2 decrement
		6	60 Hz specifications, × 3 decrement
		7	60 Hz specifications, × 2 decrement
High Startup Torque (See Note)*	Select the high startup torque V/f pattern only in the following cases. • The wiring distance between Inverter and motor is large (approx. 150 m min.) • A large torque is required at startup (elevator loads, etc.) • An AC reactor is inserted in the Inverter input or output. • You are operating a motor that is less than optimum.	8	50 Hz specifications, medium startup torque
		9	50 Hz specifications, large startup torque
		A	60 Hz specifications, medium startup torque
		B	60 Hz specifications, large startup torque
Fixed Output Operation	This pattern is used for frequencies of 60 Hz or higher. A fixed voltage is applied.	C	90 Hz specifications, voltage saturation at 60 Hz
		D	120 Hz specifications, voltage saturation at 60 Hz
		E	180 Hz specifications, voltage saturation at 60 Hz

* The torque is protected by the fully automatic torque boost function, so normally there is no need to use this pattern.

When you select these patterns, the values of constants E1-04 to E1-10 are changed automatically. There are three types of values for E1-04 to E1-10, depending on the Inverter capacity.

- 0.4 to 1.5 kW V/f pattern
- 2.2 to 45 kW V/f pattern
- 55 to 300 kW V/f pattern

The characteristics diagrams for each are shown in the following pages.

0.4 to 1.5 kW V/f Pattern

The diagrams show characteristics for a 200-V class motor. For a 400-V class motor, multiply all voltages by 2.

- Constant Torque Characteristics (Set Value: 0 to 3)

Set Value 0	50 Hz	Set Value 1	60 Hz	Set Value 2	60 Hz	Set Value 3	72 Hz
		(Initial value of set value F)					

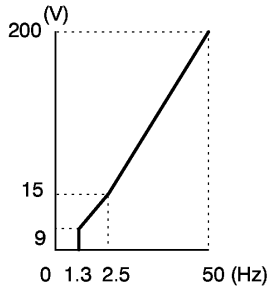

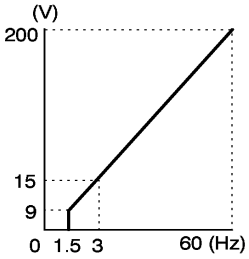

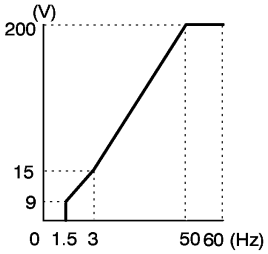

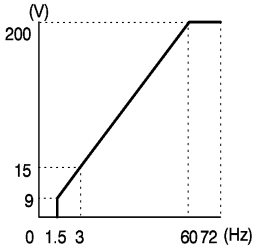

- Decrement Torque Characteristics (Set Value: 4 to 7)

Set Value 4	50 Hz	Set Value 5	50 Hz	Set Value 6	60 Hz	Set Value 7	60 Hz

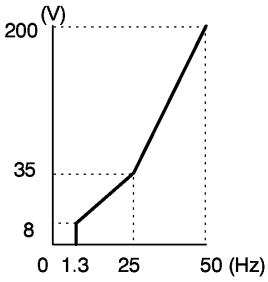

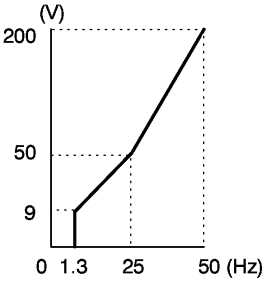

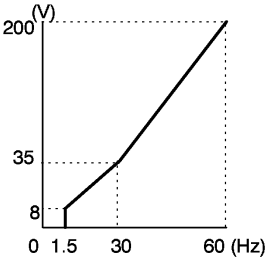

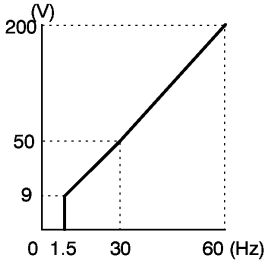

- High startup torque (Set value 8: to b)

Set Value 8	50 Hz	Set Value 9	50 Hz	Set Value A	60 Hz	Set Value B	60 Hz

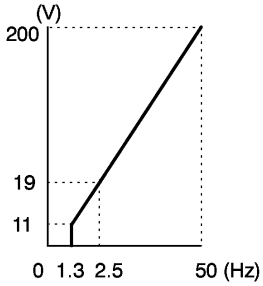

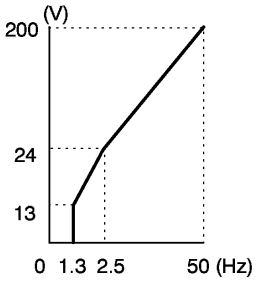

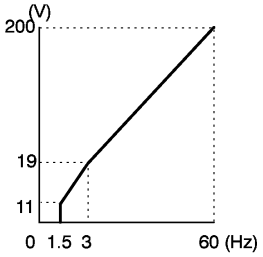

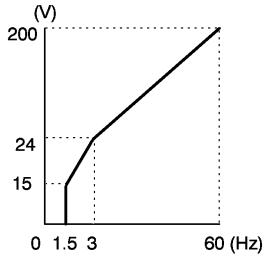

- Fixed Output Operation (Set Value: C to E)

Set Value C	90 Hz	Set Value D	120 Hz	Set Value E	180 Hz

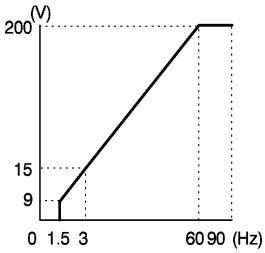

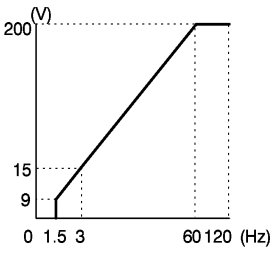

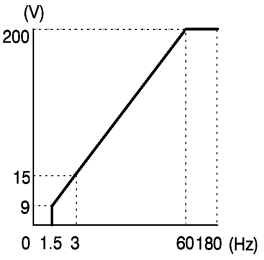

2.2 to 45 kW V/f Pattern

The diagrams show characteristics for a 200-V class motor. For a 400-V class motor, multiply all voltages by 2.

- Constant Torque Characteristics (Set Value: 0 to 3)

Set Value 0	50 Hz	Set Value 1	60 Hz	Set Value 2	60 Hz	Set Value 3	72 Hz
		(Initial value of set value F)					

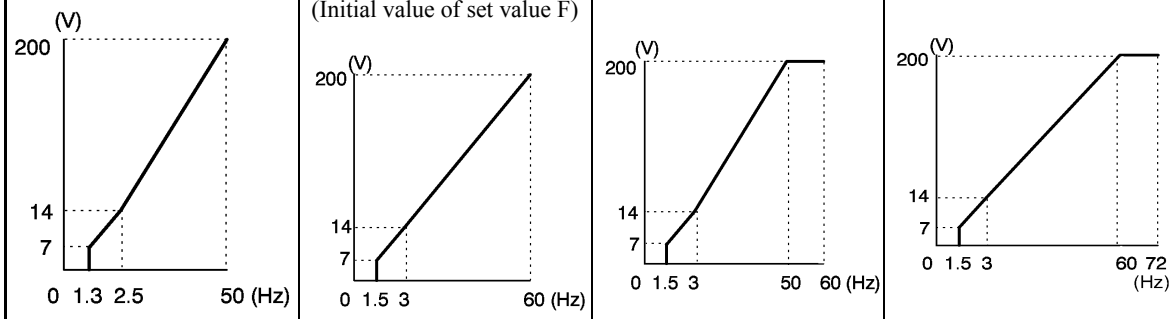

- Decrement Torque Characteristics (Set Value: 4 to 7)

Set Value 4	50 Hz	Set Value 5	50 Hz	Set Value 6	60 Hz	Set Value 7	60 Hz

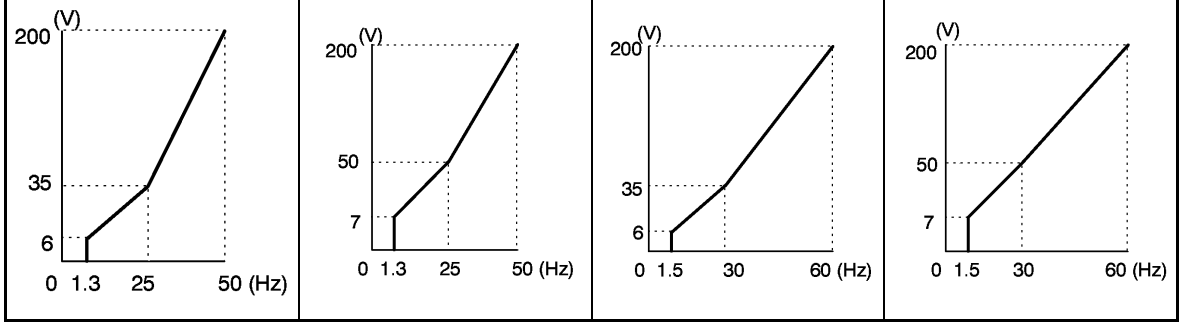

- High Startup Torque (Set Value: 8 to b)

Set Value 8	50 Hz	Set Value 9	50 Hz	Set Value A	60 Hz	Set Value B	60 Hz

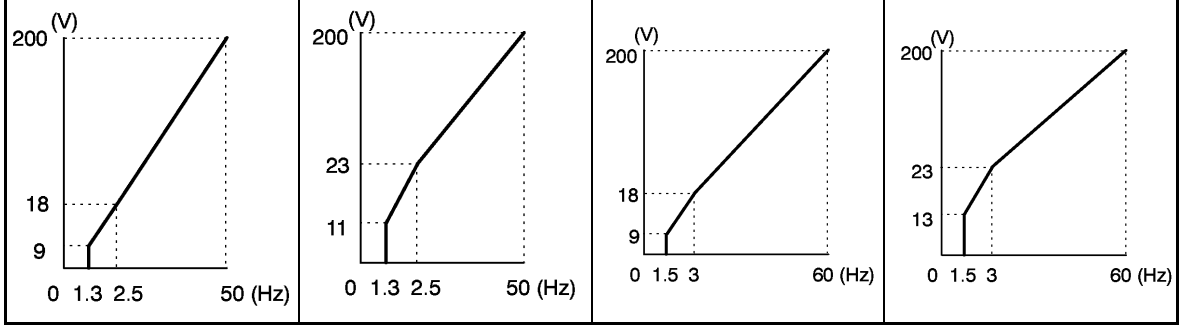

- Fixed Output Operation (Set Value: C to E)

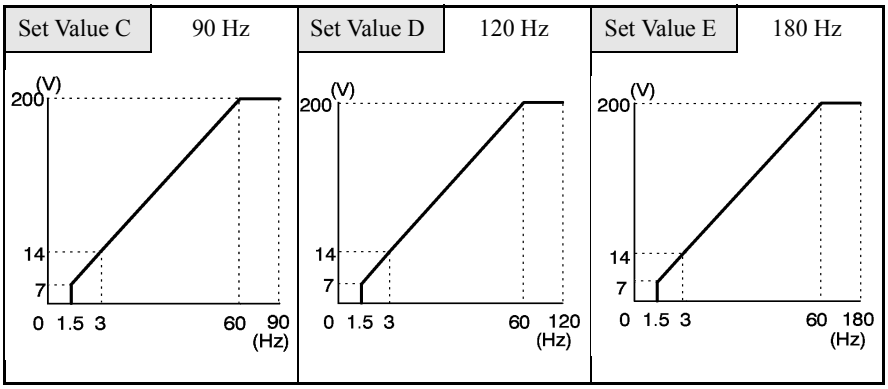

55 to 300 kW V/f Pattern

The diagrams show characteristics for a 200-V class motor. For a 400-V class motor, multiply all voltages by 2.

- Constant Torque Characteristics (Set Value: 0 to 3)

Set Value 0	50 Hz	Set Value 1	60 Hz	Set Value 2	60 Hz	Set Value 3	72 Hz
		(Initial value of set value F)					

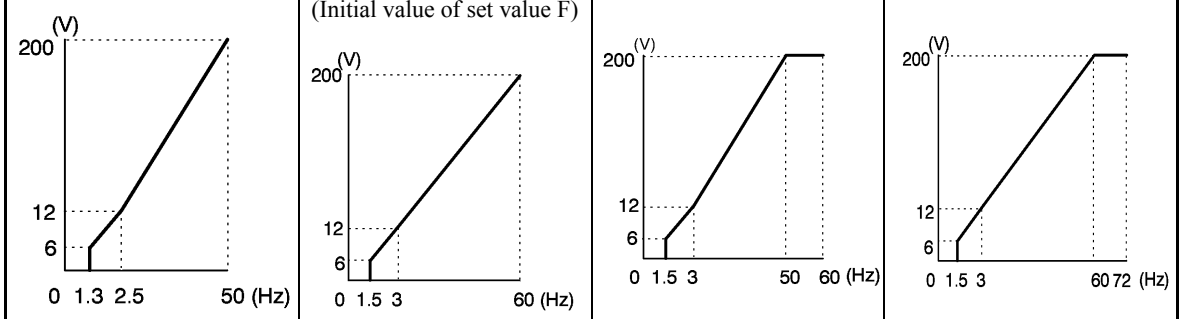

- Decrement Torque Characteristics (Set Value: 4 to 7)

Set Value 4	50 Hz	Set Value 5	50 Hz	Set Value 6	60 Hz	Set Value 7	60 Hz

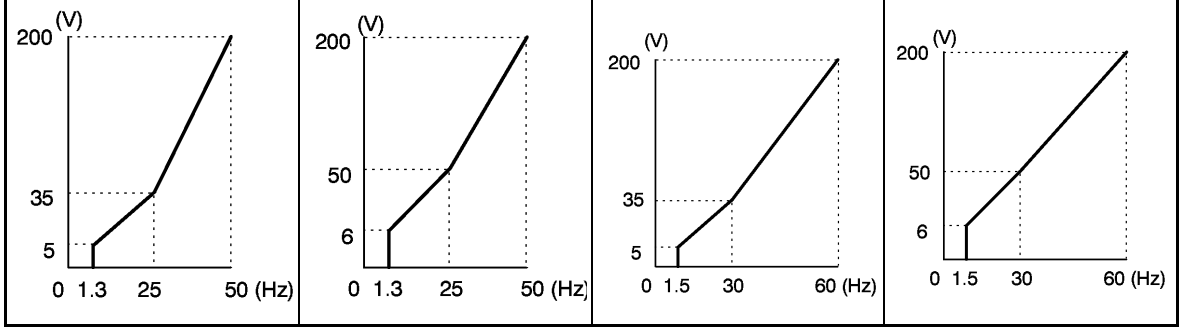

- High Startup Torque (Set Value: 8 to b)

Set Value 8	50 Hz	Set Value 9	50 Hz	Set Value A	60 Hz	Set Value B	60 Hz

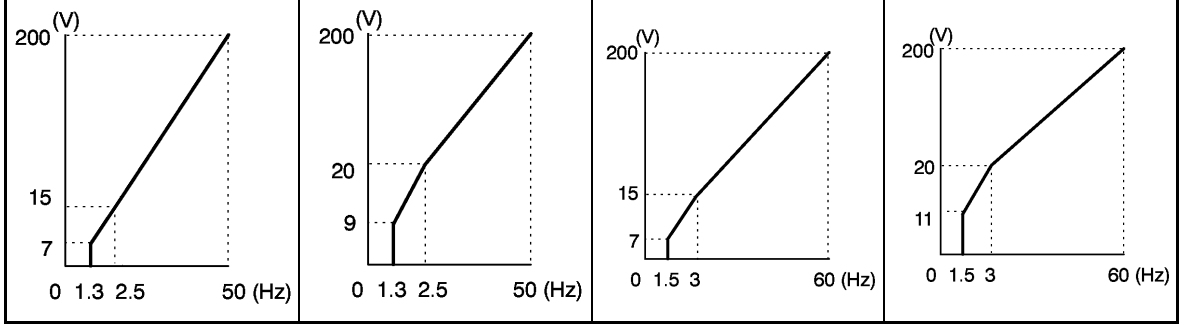

- Fixed Output Operation (Set Value: C to E)

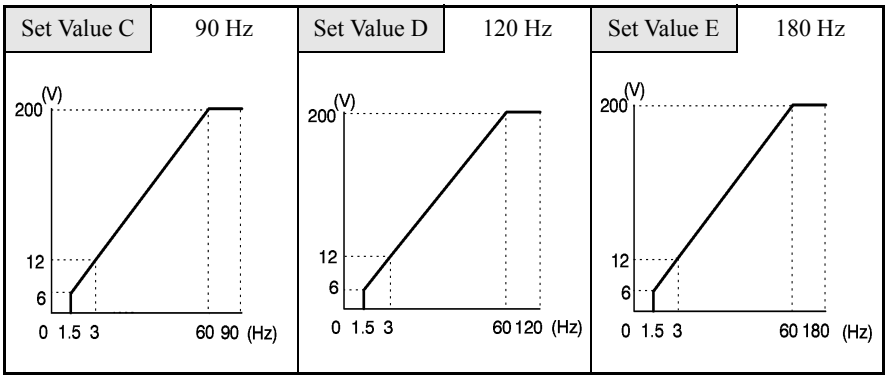

When E1-03 is set to F (User-defined V/f pattern), you can set constants E1-04 to E1-10. If E1-03 is set to anything other than F, you can only refer to constants E1-04 to E1-10. If the V/f characteristics are linear, set E1-07 and E1-09 to the same value. In this case, E1-08 will be ignored.

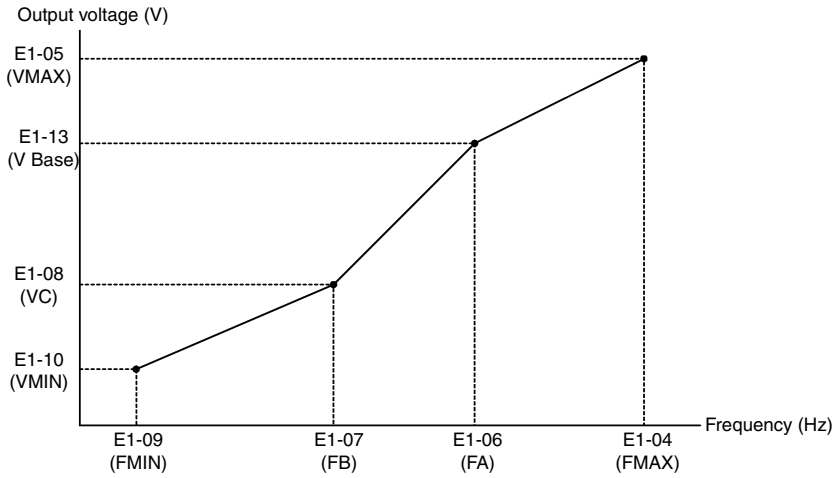

Fig 6.61 User-Set V/f Pattern

■Setting Precautions

When the setting is to user-defined V/f pattern, beware of the following points.

- When changing control method, constants E1-07 to E1-10 will change to the factory settings for that control method.
- Be sure to set the four frequencies as follows:
  E1-04 (FMAX) ≥ E1-06 (FA) > E1-07 (FB) ≥ E1-09 (FMIN)

Digital Operator Functions

This section explains the Digital Operator functions.

◆ Setting Digital Operator Functions

You can set Digital Operator-related constants such as selecting the Digital Operator display, multi-function selections, and copy functions.

■Related Constants

Constant Number	Name	Description	Setting Range	Factory Setting	Change during Operation	Control Methods		
						V/f	V/f with PG	Open Loop Vector
o1-02	Monitor selection	Set the monitor item to be displayed when the power supply is turned ON. 1: Frequency reference 2: Output frequency 3: Output current 4: The monitor item set for o1-01	1 to 4	1	Yes	A	A	A
o1-03	Frequency units of reference setting and monitor	Sets the units that will be set and displayed for the frequency reference and frequency monitor. 0: 0.01 Hz units 1: 0.01% (Maximum output frequency is 100%) 2 to 39: r/min units (Sets the motor poles) 40 to 39999: User desired display Set the desired values for setting and display for the max. output frequency. □□□□□ Set 4-digit number excluding the decimal point. Set the number of digits below the decimal point to display. Example: When the max. output frequency value is 200.0, set 12000.	0 to 39999	0	No	A	A	A
o2-01	LOCAL/REMOTE key enable/disable	Set the run method selection key (LOCAL/REMOTE Key) function. 0: Disabled 1: Enabled (Switches between the Digital Operator and the constant settings.)	0 or 1	1	No	A	A	A
o2-02	STOP Key during control circuit terminal operation	Set the STOP Key in the run mode. 0: Disabled (When the run command is issued from an external terminal, the Stop Key is disabled.) 1: Enabled (Effective even during run.)	0 or 1	1	No	A	A	A
o2-03	User constant initial value	When the frequency reference is set on the Digital Operator frequency reference monitor, sets whether the Enter key is necessary. 0: Enter Key needed 1: Enter Key not needed When set to 1, the Inverter accepts the frequency reference without Enter Key operation.	0 to 2	0	No	A	A	A

Constant Number	Name	Description	Setting Range	Factory Setting	Change during Operation	Control Methods		
						V/f	V/f with PG	Open Loop Vector
o2-05	Frequency reference setting method selection	Sets the operation when the Digital Operator is disconnected. 0: Disabled (Operation continues even if the Digital Operator is disconnected.) 1: Enabled (OPR is detected at Digital Operator disconnection. Inverter output is cut off, and fault contact is operated.)	0 or 1	0	No	A	A	A
o2-07	Cumulative operation time setting	Sets the cumulative operation time in hour units. Operation time is calculated from the set values.	0 to 65535	0	No	A	A	A
o2-10	Fan operation time setting	Set the initial value of the fan operation time using time units. The operation time accumulates from the set value.	0 to 65535	0	No	A	A	A

* Factory settings depend on Inverter capacity. (The values shown are for a 200 V Class Inverter for 0.4 kW.)

■Changing Frequency Reference and Display Units

Set the Digital Operator frequency reference and display units using constant o1-03. You can change the units for the following constants using o1-03.

- U1-01 (Frequency Reference)
- U1-02 (Output Frequency)
- U1-05 (Motor Speed)
- U1-20 (Output Frequency after Soft Start)
- d1-01 to d1-17 (Frequency references)

■Switching Monitors when the Power Supply Is ON

Using constant o1-02, select the monitor item (U1-□□ [status monitor]) to be displayed on the Digital Operator when the power supply is turned ON. For monitors that can be displayed, refer to U1-□□ in *Chapter 5 User Constants*.

Setting Precautions

If selecting monitor constants other than U1-01 (Frequency Reference), U1-02 (Output Frequency), and U1-03 (Output Current), first select the monitor items to be displayed in o1-01, and then set o1-02 to 4.

■Disabling the STOP Key

If b1-02 (Operation Method Selection) is set to 1, 2, or 3, the stop command from the STOP Key on the Digital Operator is an emergency stop command.

Set o2-02 to 0 to disable emergency stop commands from the STOP Key on the Digital Operator.

■Disabling the LOCAL/REMOTE Key

Set o2-01 to 0 to disable the LOCAL/REMOTE Key on the Digital Operator. You cannot switch Inverter reference inputs set using reference inputs from the Digital Operator, b1-01 (Reference Selection), or b1-02 (Operation Method Selection).

■Initializing Changed Constant Values

You can save to the Inverter constant set values that you have changed as constant initial values. Change the set values from the Inverter factory settings, and then set o2-03 to 1.

Set A1-03 (Initialize) to 1110 to initialize the Inverter constants using the user-set initial values in memory. To clear the user-set initial values in memory, set o2-03 to 2.

■Setting the Frequency Reference using the UP and DOWN Keys without Using the Enter Key

Use this function when inputting frequency references from the Digital Operator. When o2-05 is set to 1, you can increment and decrement the frequency reference using the UP and DOWN Keys without using the Enter Key.

For example, enter the Run command using a 0 Hz reference, and then continuously press the UP Key to increment the frequency reference by 0.01 Hz only for the first 0.5 s, and then by 0.01 Hz every 80 ms for 3 s thereafter. Press and hold down the UP Key for 3 s minimum to reach the maximum output frequency 10 s after that. The frequency reference that has been set will be stored in memory 5 s after the UP or DOWN Keys are released.

■Clearing Cumulative Operation Time

Set the cumulative operation time initial value in time units in constant o2-07. Set o2-07 to 0 to clear U1-13 (inverter Operating Time).

■Clearing Inverter Cooling Fan Operation Time

Set the fan operation time initial value in time units in constant o2-10. Set o2-10 to 0 to clear U1-40 (Cooling Fan Operating Time).

◆ Copying Constants

The Digital Operator can perform the following three functions using the built-in EEPROM (non-volatile memory).

- Store Inverter constant set values in the Digital Operator (READ)
- Write constant set values stored in the Digital Operator to the Inverter (COPY)
- Compare constant set values stored in the Digital Operator with Inverter constants (VERIFY)

■Related Constants

Constant Number	Name	Description	Setting Range	Factory Setting	Change during Operation	Control Methods		
						V/f	V/f with PG	Open Loop Vector
o3-01	Copy function selection	0: Normal operation 1: READ (Inverter to Operator) 2: COPY (Operator to Inverter) 3: Verify (compare)	0 to 3	0	No	A	A	A
o3-02	Read permitted selection	0: Read prohibited 1: Read permitted	0 or 1	0	No	A	A	A

■Storing Inverter set values in the Digital Operator (READ)

To store Inverter set values in the Digital Operator, make the settings using the following method.

Table 6.2 READ Function Procedure

Step No.	Digital Operator Display	Explanation
1	A1-00 DRIVE QUICK ADV VERIFY A.TUNE	Press the Menu Key, and select advanced programming mode.
2	A1-00 DRIVE QUICK ADV VERIFY A.TUNE	Press the DATA/ENTER Key, and select the constants monitor display.
3	o3-01 DRIVE QUICK ADV VERIFY A.TUNE	Display o3-01 (Copy Function Selection) using the Increment Key and Decrement Key.
4	00 DRIVE QUICK ADV VERIFY A.TUNE	Press the DATA/ENTER Key, and select the constants setting display.
5	01 DRIVE QUICK ADV VERIFY A.TUNE	Change the set value to 1 using the Increment Key.
6	rEd DRIVE QUICK ADV VERIFY A.TUNE	Set the changed data using the DATA/ENTER Key. The READ function will start.
7	End → o3-01	If the READ function ends normally, End is displayed on the Digital Operator. Constant o3-01 is automatically reset to 0, and then the display returns to o3-01.

An error may occur while saving to memory. If an error is displayed, press any key to cancel the error display and return to the o3-01 display. Error displays and their meanings are shown below. (Refer to *Chapter 7 Errors when Using Digital Operator Copy Function.)*

Error Display	Meaning
PrE	You are attempting to set o3-01 to 1 while o3-02 is set to 0.
iFE	Read data length mismatch or read data error.
rdE	Tried to write constants to EEPROM on the Digital Operator, but unable to perform write operation.

Select READ Permitted

Prevent overwriting the data stored in EEPROM in the Digital Operator by mistake. With o3-02 set to 0, if you set o3-01 to 1, and perform the write operation, PrE will be displayed on the Digital Operator, and the write operation will be stopped.

■Writing Constant Set Values Stored in the Digital Operator to the Inverter (COPY)

To write constant set values stored in the Digital Operator to the Inverter, make the settings using the following method.

Table 6.3 COPY Function Procedure

Step No.	Digital Operator Display	Explanation
1	A1-00 (DRIVE QUICK ADV VERIFY A. TUNE)	Press the MENU Key, and select advanced programming mode.
2	A1-00 (DRIVE QUICK ADV VERIFY A. TUNE)	Press the DATA/ENTER Key, and select the constants monitor display.
3	o3-01 (DRIVE QUICK ADV VERIFY A. TUNE)	Display o3-01 (Copy Function Selection) using the Increment Key and Decrement Key.
4	00 (DRIVE QUICK ADV VERIFY A. TUNE)	Press the DATA/ENTER Key, and select the constants setting display.
5	02 (DRIVE QUICK ADV VERIFY A. TUNE)	Change the set value to 2 using the Increment Key.
6	CPY (DRIVE QUICK ADV VERIFY A. TUNE)	Set the changed data using the DATA/ENTER Key. The COPY function will start.
7	End → o3-01	If the COPY function ends normally, End is displayed on the Digital Operator. Constant o3-01 is automatically reset to 0, and then the display returns to o3-01.

During the copy operation, errors may occur. If an error is displayed, set the constants again. Error displays and their meanings are shown below. (Refer to *Chapter 7 Errors when Using Digital Operator Copy Function.)*

Error Display	Meaning
CPE	Inverter product code and Inverter software number are different.

Error Display	Meaning
vAE	Inverter capacity with which you are trying to copy, and the Inverter capacity stored in the Digital Operator are different.
CrE	The Inverter control method in which you are trying to copy, and the Inverter control method stored in the Digital Operator are different.
CYE	Comparison between the constant written to the Inverter and the constant in the Digital Operator shows they are different.
CSE	After copying has ended, comparison between the sum value of the Inverter constant area and the sum value of the Digital Operator constant area shows they are different.

■Comparing Inverter Constants and Digital Operator Constant Set Values (VERIFY)

To compare Inverter constants and Digital Operator constant set values, make the settings using the following method.

Table 6.4 VERIFY Function Procedure

Step No.	Digital Operator Display	Explanation
1	A1-00 DRIVE QUICK ADV VERIFY A.TUNE	Press the MENU Key. and select advanced programming mode.
2	A1-00 DRIVE QUICK ADV VERIFY A.TUNE	Press the DATA/ENTER Key, and select the constants monitor display.
3	o3-01 DRIVE QUICK ADV VERIFY A.TUNE	Display o3-01 (Copy Function Selection) using the Increment Key and Decrement Key.
4	00 DRIVE QUICK ADV VERIFY A.TUNE	Press the DATA/ENTER Key, and select the function setting display.
5	03 DRIVE QUICK ADV VERIFY A.TUNE	Change the set value to 3 using the Increment Key.
6	vFY DRIVE QUICK ADV VERIFY A.TUNE	Set the changed data using the DATA/ENTER Key. The VERIFY function will start.
7	End → o3-01	If the VERIFY function ends normally, End is displayed on the Digital Operator. Constant o3-01 is automatically reset to 0, and then the display returns to o3-01.

An error may occur during the comparison. If an error is displayed, press any key to cancel the error display and return to the o3-01 display. Error displays and their meanings are shown below. (Refer to *Chapter 7 Errors when Using Digital Operator Copy Function.)*

Error Display	Meaning
vYE	Verify error (Settings in the Digital Operator and the Inverter do not match).

■Application Precautions

When using the copy function, check that the following settings are the same between the Inverter and the Digital Operator.

- Inverter product and type
- Software number
- Inverter capacity and voltage
- Control method

◆ Prohibiting Writing Constants from the Digital Operator

If you set A1-01 to 0, you can refer to and set the A1 and A2 constant groups, and refer to drive mode, using the Digital Operator.

If you set one of the constants H1-01 to H1-05 (multi-function contact input terminal S3 to S7 function selection) to 1B (write constants permitted), you can write constants from the digital operator when the terminal that has been set is ON. When the set terminal is OFF, writing constants other than the frequency reference is prohibited. You can, however, reference constants.

Constant Number	Name	Description	Setting Range	Factory Setting	Change during Operation	Control Methods		
						V/f	V/f with PG	Open Loop Vector
A1-01	Constant access level	Used to set the constant access level (set/read.) 0: Monitoring only (Monitoring drive mode and setting A1-01 and A1-04.) 1: Used to select user constant (Only constants set in A2-01 to A2-32 can be read and set.) 2: ADVANCED (Constants can be read and set in both quick programming mode and advanced programming (A) mode.)	0 to 2	2	Yes	A	A	A

◆ Setting a Password

When a password is set in A1-05, if the set values in A1-04 and A1-05 do not match, you cannot refer to or change the settings of constants A1-01 to A1-03, or A2-01 to A2-32.

You can prohibit the setting and referencing of all constants except A1-00 by using the password function in combination with setting A1-01 to 0 (Monitor only).

■Related Constants

Constant Number	Name	Description	Setting Range	Factory Setting	Change during Operation	Control Methods		
						V/f	V/f with PG	Open Loop Vector
A1-01	Constant access level	Used to set the constant access level (set/read.) 0: Monitoring only (Monitoring drive mode and setting A1-01 and A1-04.) 1: Used to select user constant (Only constants set in A2-01 to A2-32 can be read and set.) 2: ADVANCED (Constants can be read and set in both quick programming mode and advanced programming (A) mode.)	0 to 2	2	Yes	A	A	A
A1-04	Password	Password input when a password has been set in A1-05. This function write-protects some constants of the initialize mode. If the password is changed, A1-01 to A1-03 and A2-01 to A2-32 constants can no longer be changed. (Programming mode constants can be changed.)	0 to 9999	0	No	A	A	A
A1-05	Password setting	Used to set a four digit number as the password. This constant is not usually displayed. When the password (A1-04) is displayed, hold down the RESET Key and press the Menu Key and the password will be displayed.	0 to 9999	0	No	A	A	A

■Setting Precautions

Constant A1-05 cannot be displayed using normal key operations. To display A1-05, hold down the RESET Key and press the MENU Key while A1-04 is displayed.

◆ Displaying User-set Constants Only

You can set and refer to constants necessary to the Inverter only, using the A2 constants (user-set constants) and A1-01 (Constants Access Level).

Set the number of the constant to which you want to refer in A2-01 to A2-32, and then set A1-01 to 1. You can set and refer to constants set in A1-01 to A1-03 and A2-01 to A2-32 only, using advanced programming mode.

■Related Constants

Constant Number	Name	Description	Setting Range	Factory Setting	Change during Operation	Control Methods		
						V/f	V/f with PG	Open Loop Vector
A2-01 to A2-32	User setting constants	Used to set the constant numbers that can be set/read. Maximum 32. Effective when the access level (A1-01) is set to User Program (1). Constants set in A2-01 to A2-32 can be set/read in programming mode.	b1-01 to o2-08	-	No	A	A	A

Options

This section explains the Inverter option functions.

◆ Performing Speed Control with PG

This section explains functions with V/f control with PG.

■Related Constants

Constant Number	Name	Description	Setting Range	Factory Setting	Change during Operation	Control Methods		
						V/f	V/f with PG	Open Loop Vector
F1-01	PG constant	Set the number of PG (pulse generator or encoder) pulses. Sets the number of pulses per motor revolution.	0 to 60000	600	No	No	Q	No
F1-02	Operation selection at PG open circuit (PGO)	Sets the PG disconnection stopping method. 0: Ramp to stop (Deceleration stop using the deceleration time 1, C1-02.) 1: Coast to stop 2: Fast stop (Emergency stop using the deceleration time in C1-09.) 3: Continue operation (To protect the motor or machinery, do not make this setting.)	0 to 3	1	No	No	A	No
F1-03	Operation selection at overspeed (OS)	Sets the stopping method when an overspeed (OS) fault occurs. 0: Ramp to stop (Deceleration stop using the deceleration time 1, C1-02.) 1: Coast to stop 2: Fast stop (Emergency stop using the deceleration time in C1-09.) 3: Continue operation (To protect the motor or machinery, do not make this setting.)	0 to 3	1	No	No	A	No
F1-04	Operation selection at deviation (DEV)	Sets the stopping method when a speed deviation (DEV) fault occurs. 0: Decelerate to stop (Deceleration stop using the deceleration time 1, C1-02.) 1: Coast to stop 2: Emergency stop (Emergency stop using the deceleration time in C1-09.) 3: Continue operation (DEV is displayed and operation continued.)	0 to 3	3	No	No	A	No
F1-05	PG rotation	0: Phase A leads with forward run command. (Phase B leads with reverse run command.) 1: Phase B leads with forward run command. (Phase A leads with reverse run command.)	0 or 1	0	No	No	A	No
F1-06	PG division rate (PG pulse monitor)	Sets the division ratio for the PG speed control card pulse output. Division ratio = (1 + n)/m (n = 0 or 1, m = 1 to 32) F1-06 = □ □□ (n, m) This constant is effective only when a PG-B2 is used. The possible division ratio settings are 1/32 ≤ F1-06 ≤ 1	1 to 132	1	No	No	A	No

Constant Number	Name	Description	Setting Range	Factory Setting	Change during Operation	Control Methods		
						V/f	V/f with PG	Open Loop Vector
F1-07	Integral value during accel/decel enable/disable	Sets integral control during acceleration/deceleration to either enabled or disabled. 0: Disabled (The integral function isn't used while accelerating or decelerating; it is used at constant speeds.) 1: Enabled (The integral function is used at all times.)	0 or 1	0	No	No	A	No
F1-08	Overspeed (OS) detection level	Sets the overspeed detection method. Frequencies above that set for F1-08 (set as a percentage of the maximum output frequency) that continue to exceed this frequency for the time set in F1-09 are detected as overspeed faults.	0 to 120	115%	No	No	A	No
F1-09	Overspeed detection delay time (OS)		0.0 to 2.0	1.0 s	No	No	A	No
F1-10	Excessive speed deviation (DEV) detection level	Sets the speed deviation detection method. Any speed deviation above the F1-10 set level (set as a percentage of the maximum output frequency) that continues for the time set in F1-11 is detected as a speed deviation. Speed deviation is the difference between actual motor speed and the reference command speed.	0 to 50	10%	No	No	A	No
F1-11	Excessive speed deviation detection delay time (DEV)		0.0 to 10.0	0.5 s	No	No	A	No
F1-12	Number of PG gear teeth 1	Sets the number of teeth on the gears if there are gears between the PG and the motor. $\frac{\text{Input pulses input from PG} \times 60}{\text{F1-01}} \times \frac{\text{F1-13}}{\text{F1-12}}$ A gear ratio of 1 will be used if either of these constants is set to 0.	0 to 1000	0	No	No	A	No
F1-13	Number of PG gear teeth 2			0	No	No	A	No
F1-14	PG open-circuit detection time	Used to set the PG disconnection detection time. PGO will be detected if the detection time continues beyond the set time.	0.0 to 10.0	2.0 s	No	No	A	No

■Using PG Speed Control Card

There are four types of PG Speed Control Card that can be used in V/f control with PG.

- PG-A2: A-phase (single) pulse input, compatible with open collector or complimentary outputs.
- PG-B2: A/B-phase pulse input, compatible with complimentary outputs.
- PG-D2: A-phase (single) pulse input, compatible with line drivers.
- PG-X2: A/B/Z-phase pulse input, compatible with line drivers.

For the connection diagram, refer to *page 2*-33.

■Setting Number of PG Pulses

Set the number of PG (Pulse Generator/Encoder) pulses in pulses/rotation. Set the number of A-phase or B-phase pulses per 1 motor rotation in F1-01.

■Matching PG Rotation Direction and Motor Rotation Direction

Constant F1-05 matches the PG rotation direction and the motor rotation direction. If the motor is rotating forwards, set whether it is A-phase driven or B-phase driven. Make this setting when using PG-B2 or PG-X2.

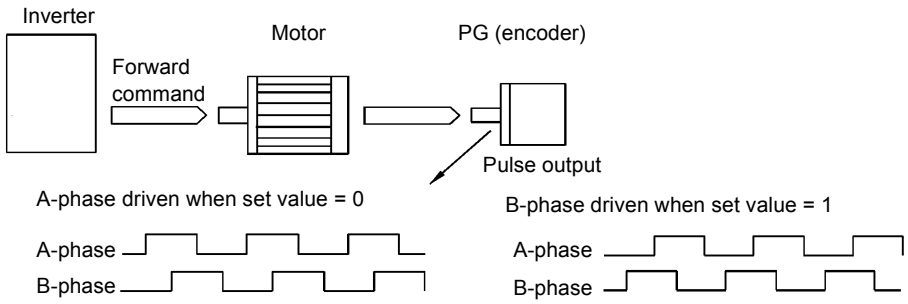

Example: Forward rotation of standard Yaskawa motor (PG used: Samtack (KK))

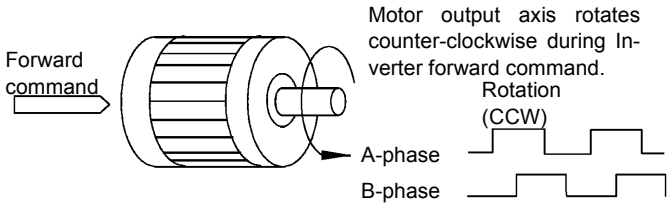

Yaskawa standard PG used is A-phase driven (CCW) when motor rotation is forward.

Generally, PG is A-phase driven when rotation is clockwise (CW) see from the input axis. Also, motor rotation is counter-clockwise (CCW) seen from the output side when forward commands are output. Consequently, when motor rotation is forward, PG is normally A-phase driven when a load is applied, and B-phase driven when a load is not applied.

■Setting Number of Gear Teeth Between PG and Motor

Set the number of PG gear teeth in F1-12 and F1-13. If there are gears between the motor and PG, you can operate the motor by setting the number of gear teeth.

When the number of gear teeth has been set, the number of motor rotations within the Inverter is calculated using the following formula.

No. of motor rotations (r/min.) = No. of input pulses from PC × 60 / F1-01 × F1-13 (No. of gear teeth on load side) / F1-12 (No. of gear teeth on motor side)

■Matching Motor Speed During Acceleration and Deceleration to Frequency Reference

You can select whether to enable or disable integral operation during acceleration and deceleration.

To match the motor speed as closely as possible to the frequency reference even during acceleration and deceleration, set F1-07 to 1.

IMPORTANT

If F1-01 is set to 1, overshoot or undershoot may occur easily immediately after acceleration and deceleration. To minimize the possibility of overshoot or undershoot occurring, set F1-01 to 0.

■Setting PG Pulse Monitor Output Dividing Ratio

This function is enabled only when using PG speed control card PG-B2. Set the dividing ratio for the PG pulse monitor output. The set value is expressed as n for the higher place digit, and m for the lower place 2 digits. The dividing ratio is calculated as follows:

Dividing ratio = (1 + n)/m (Setting range) n: 0 or 1, m: 1 to 32

F1-06 = $\underset{n}{\underline{\square}}\ \underset{m}{\underline{\square\square}}$

The dividing ratio can be set within the following range: $1/32 \leq$ F1-06 ≤ 1. For example, if the dividing ratio is 1/2 (set value 2), half of the number of pulses from the PG are monitor outputs.

■Detecting PG Open Circuit

Select the stopping method when PG cable disconnected is detected and the PG open circuit (PGO) detection time.

When the Inverter is operating with the frequency reference set to 1% minimum (except when operating on direct current), if the speed feedback from PG is greater than the time setting in F1-14, PGO is detected.

■Detecting Motor Overspeed

An error is detected when the number of motor rotations exceeds the regulated limit. An overspeed (OS) is detected when a frequency that exceeds the set value in F1-08 continues for longer than the time set in F1-09. After detecting an overspeed (OS), the Inverter stops according to the setting in F1-03.

■Detecting Speed Difference between the Motor and Speed Reference

An error is detected when the speed deviation (i.e., the difference between the designated speed and the actual motor speed) is too great. Speed deviation (DEV) is detected after a speed agreement is detected and when the speed reference and actual work piece speed are within the setting of L4-02, if a speed deviation great than the set value in F1-10 continues for longer than the time set in F1-11. After a speed deviation is detected, the Inverter stops according to the setting in F1-04.

◆ Using Digital Output Cards

There are two types of Inverter digital output cards:

- DO-02C
  Relay contact output (DPDT contact)
- DO-08
  6 photo coupler output channels (shared commons)
  2 (independent) relay contact output channels (NC contact)

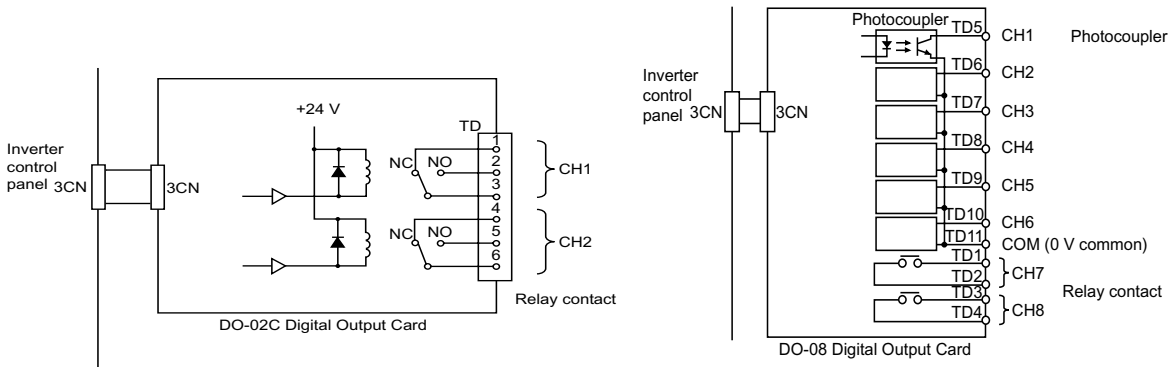

Fig 6.62 Digital Output Cards

■Related Constants

Constant Number	Name	Description	Setting Range	Factory Setting	Change during Operation	Control Methods		
						V/f	V/f with PG	Open Loop Vector
F5-01	Channel 1 output selection	Effective when a Digital Output Card (DO-2 or DO-08) is used. Set the numbers of the multi-function output to be output.	0 to 37	0	No	A	A	A
F5-02	Channel 2 output selection	Effective when a Digital Output Card (DO-2 or DO-08) is used. Set the number of the multi-function output to be output.	0 to 37	1	No	A	A	A
F5-03	Channel 3 output selection	Effective when a DO-08 Digital Output Card is used. Set the number of the multi-function output to be output.	0 to 37	2	No	A	A	A
F5-04	Channel 4 output selection	Effective when a DO-08 Digital Output Card is used. Set the number of the multi-function output to be output.	0 to 37	4	No	A	A	A
F5-05	Channel 5 output selection	Effective when a DO-08 Digital Output Card is used. Set the number of the multi-function output to be output.	0 to 37	6	No	A	A	A
F5-06	Channel 6 output selection	Effective when a DO-08 Digital Output Card is used. Set the number of the multi-function output to be output.	0 to 37	37	No	A	A	A
F5-07	Channel 7 output selection	Effective when a DO-08 Digital Output Card is used. Set the number of the multi-function output to be output.	0 to 37	0F	No	A	A	A
F5-08	Channel 8 output selection	Effective when a DO-08 Digital Output Card is used. Set the number of the multi-function output to be output.	0 to 37	0F	No	A	A	A
F5-09	DO-08 output mode selection	Effective when a DO-08 Digital Output Card is used. Set the output mode. 0: 8-channel individual outputs 1: Binary code output 2: Output according to F5-01 to F5-08 settings.	0 to 2	0	No	A	A	A

■Setting Output Items for the DO-02C Digital Output Card

If using DO-02C Digital Output Card, set the output items using F5-01 and F5-02.

■Setting Output Items for the DO-08 Digital Output Card

If using DO-08 Digital Output Card, select one of the following three output modes according to the setting in F5-09.

F5-09 Set to 0

Set Value	Terminal Number	Output Details
0: 8 separate outputs	TD5-TD11	Over current (SC, OC, GF)
	TD6-TD11	Over voltage (OV)
	TD7-TD11	Inverter overload (OL2)
	TD8-TD11	Fuse blown (PUF)
	TD9-TD11	Overspeed (OS)
	TD10-TD11	Inverter overheated (OH1) or motor overload (OL1)
	TD1-TD2	Zero speed detected
	TD3-TD4	Speed agreement

F5-09 Set to 1

Set Value	Terminal Number	Output Details	
1: Binary code output	TD5-TD11	bit 0	Encoded output (Refer to table below)
	TD6-TD11	bit 1	
	TD7-TD11	bit 2	
	TD8-TD11	bit 3	
	TD9-TD11	Zero speed detected	
	TD10-TD11	Speed agreement	
	TD1-TD2	Operating	
	TD3-TD4	Minor fault	

The following table shows the code outputs.

Bits 3, 2, 1, and 0	Output Details	Bits 3, 2, 1, and 0	Output Details
0000	No error	1000	External error (EFxx)
0001	Over current (SC, OC, GF)	1001	Controller error (CPFxx)
0010	Over voltage (OV)	1010	Motor overload (OL1)
0011	Inverter overload (OL2)	1011	Not used
0100	Inverter overheated (OH, OH1)	1100	Power loss (UV1, UV2, or UV3)
0101	Overspeed (OS)	1101	Speed deviation (DEV)
0110	Fuse blown (PUF)	1110	PG open circuit (PGO)
0111	Dynamic braking resistor (RH) Injection brake transistor error (RR)	1111	Not used

F5-09 Set to 2

Output depends on the settings in F5-01 to F5-08.

Notes:

7

Troubleshooting

This chapter describes the alarm and fault displays, explanations for fault conditions and corrective actions to be taken if the inverter and/or motor malfunctions.

Protective and Diagnostic Functions

This section describes the alarm functions of the Inverter. The alarm functions include fault detection, alarm detection, operation error detection, and auto tuning error detection.

◆ Fault Detection

When the Inverter detects a fault, the fault output contact closes, and the Inverter output is shut OFF causing the motor to coast to a stop. (The stopping method can be selected for some faults, and the selected stopping method will be used with these faults.) A fault code is displayed on the Digital Operator.

When a fault has occurred, refer to the following table to identify and correct the cause of the fault.

Use one of the following methods to reset the fault after restarting the Inverter:

- Set a multi-function contact input (H1-01 to H1-05) to 14 (Fault Reset) and close the Fault Reset signal.
- Press the RESET Key on the Digital Operator.
- Turn the main circuit power supply OFF and then ON again.

Table 7.1 Fault Displays and Processing

Display	Meaning	Probable Causes	Corrective Actions
oC	Over current The Inverter output current exceeded the over current detection level. (200% of rated current)	• A short-circuit or ground fault occurred at the Inverter output. (A short or ground fault can be caused by motor burn damage, worn insulation, or damaged cable.) • The load is too large or the acceleration/deceleration time is too short. • A special-purpose motor or motor with a capacity too large for the Inverter is being used. • A magnetic switch was switched at the Inverter output.	Reset the fault after correcting its cause.
GF	Ground Fault The ground fault current at the Inverter output exceeded approximately 50% of the Inverter rated output current.	A ground fault occurred at the Inverter output. (A ground fault can be caused by motor burn damage, worn insulation, or a damaged cable.)	Reset the fault after correcting its cause.
PUF	Fuse Blown The fuse in the main circuit is blown.	The output transistor has failed because of a short-circuit or ground fault at the Inverter output. Check whether there is a short-circuit between the following terminals. A short-circuit will damage the output transistor: B1(⊕ 3)Å□Å□U,V,W ⊖Å□Å□U,V,W	Replace the Inverter after correcting the cause.

Table 7.1 Fault Displays and Processing (Continued)

Display	Meaning	Probable Causes	Corrective Actions
ou	Main Circuit Over voltage The main circuit DC voltage exceeded the over voltage detection level. 200 V class: Approx. 410 V 400 V class: Approx. 820 V	The deceleration time is too short and the regenerative energy from the motor is too large.	Increase the deceleration time or connect a braking resistor (or Braking Resistor Unit).
		The power supply voltage is too high.	Decrease the input voltage so it is within specifications.
uv1	Main Circuit Under voltage The main circuit DC voltage is below the Under voltage Detection Level (L2-05). 200 V class: Approx. 190 V 400 V class: Approx. 380 V Main Circuit MC Operation Failure The MC stopped responding during Inverter operation. Applicable Inverter Capacities 200 V class: 37 to 110 kW 400 V class: 75 to 300 kW	• An open-phase occurred on the input power supply. • A momentary power loss occurred. • The wiring terminals for the input power supply are loose. • The voltage fluctuations in the input power supply are too large. • A fault occurred in the surge prevention circuit.	Reset the fault after correcting its cause.
uv2	Control Power Fault The control power supply voltage dropped.	---	• Try turning the power supply off and on. • Replace the Inverter if the fault continues to occur.
uv3	Inrush Prevention Circuit Fault Overheating occurred in the inrush resistor. The MC did not respond for 10 s even though the MC ON signal has been output. Applicable Inverter Capacities 200 V class: 37 to 110 kW 400 V class: 75 to 300 kW	• The MC in the main circuit failed. • The MC excitation coil is burned out.	• Try turning the power supply off and on. • Replace the Inverter if the fault continues to occur.
PF	Main Circuit Voltage Fault The main circuit DC voltage oscillates unusually (not when regenerating). This fault is detected when L8-05 is set to "Enabled."	• An open-phase occurred in the input power supply. • A momentary power loss occurred. • The wiring terminals for the input power supply are loose. • The voltage fluctuations in the input power supply are too large. • The voltage balance between phases is bad.	Reset the fault after correcting its cause.
LF	Output Open-phase An open-phase occurred at the Inverter output. This fault is detected when L8-07 is set to "Enabled."	• There is a broken wire in the output cable. • There is a broken wire in the motor-winding. • The output terminals are loose.	Reset the fault after correcting its cause.
		The motor being used has a capacity less than 5% of the Inverter's maximum motor capacity.	Check the motor and Inverter capacity.

Table 7.1 Fault Displays and Processing (Continued)

Display	Meaning	Probable Causes	Corrective Actions
oH (oH1)	Cooling Fin Overheating The temperature of the Inverter's cooling fins exceeded the setting in L8-02 or 105°C. OH: The temperature exceeded the setting in L8-02 (Stopping method can be changed by L8-03.). OH1: The temperature exceeded 100°C (Stopping method: Coast to stop).	The ambient temperature is too high.	Install a cooling unit.
		There is a heat source nearby.	Remove the heat source.
		The Inverter's cooling fan has stopped.	Replace the cooling fan. (Contact our sales representative.)
	Inverter's Cooling Fan Stopped	The Inverter's cooling fan has stopped.	
oH3	Motor Overheating Alarm The Inverter will stop or will continue to operate according to the setting of L1-03.	The motor has overheated.	Check the size of the load and the length of the acceleration, deceleration, and cycle times.
			Check the V/f characteristics.
			Check the motor temperature input on terminals A1 and A2.
oH4	Motor Overheating Fault The Inverter will stop according to the setting of L1-04.	The motor has overheated.	Check the size of the load and the length of the acceleration, deceleration, and cycle times.
			Check the V/f characteristics.
			Check the motor temperature input on terminals A1 and A2.
rH	Installed Braking Resistor Overheating The braking resistor is overheated and the protection function has operated if it has been enabled in L8-01.	The deceleration time is too short and the regenerative energy from the motor is too large.	• Reduce the load, increase the deceleration time, or reduce the motor speed. • Change to a Braking Resistor Unit.
rr	Internal Braking Transistor Fault The braking transistor is not operating properly.	-	• Try turning the power supply off and on. • Replace the Inverter if the fault continues to occur.
oL1	Motor Overload The motor overload protection function has operated based on the internal electronic thermal value.	The load is too heavy. The acceleration time, deceleration time, and cycle time are too short.	Check the size of the load and the length of the acceleration, deceleration, and cycle times.
		The V/f characteristics voltage is too high or too low.	Check the V/f characteristics.
		The Motor Rated Current (E2-01) is incorrect.	Check the Motor Rated Current (E2-01).

Table 7.1 Fault Displays and Processing (Continued)

Display	Meaning	Probable Causes	Corrective Actions
oL2	Inverter Overload The Inverter overload protection function has operated based on the internal electronic thermal value.	The load is too heavy. The acceleration time, deceleration time and cycle time are too short.	Check the size of the load and the length of the acceleration, deceleration, and cycle times.
		The V/f characteristics voltage is too high or too low.	Check the V/f characteristics.
		The Inverter capacity is too low.	Replace the Inverter with one that has a larger capacity.
oL3	Over torque Detected 1 There has been a current greater than the setting in L6-02 for longer than the setting in L6-03.	-	• Make sure that the settings in L6-02 and L6-03 are appropriate. • Check the mechanical system and correct the cause of the over torque.
oL4	Over torque Detected 2 There has been a current greater than the setting in L6-05 for longer than the setting in L6-06.	-	• Make sure that the current setting in L6-05 and time setting in L6-06 are appropriate. • Check the mechanical system and correct the cause of the over torque.
oL7	High-slip Braking OL The output frequency did not change for longer than the time set in N3-04.	The inertia returned to the load is too large.	• Make sure the load is an inertial load. • Set the system so that the deceleration time that does not produce 0 V is 120 s or less.
UL3	Under torque Detected 1 There has been a current less than the setting in L6-02 for longer than the setting in L6-03.	-	• Make sure that the settings in L6-02 and L6-03 are appropriate. • Check the mechanical system and correct the cause of the over torque.
UL4	Under torque Detected 2 There has been a current less than the setting in L6-05 for longer than the setting in L6-06.	-	• Make sure that the current setting in L6-05 and time setting in L6-06 are appropriate. • Check the mechanical system and correct the cause of the over torque.
oS	Overspeed The speed has been greater than the setting in F1-08 for longer than the setting in F1-09.	Overshooting/Undershooting are occurring.	Adjust the gain again.
		The reference speed is too high.	Check the reference circuit and reference gain.
		The settings in F1-08 and F1-09 aren't appropriate.	Check the settings in F1-08 and F1-09.

Table 7.1 Fault Displays and Processing (Continued)

Display	Meaning	Probable Causes	Corrective Actions
PGo	PG Disconnection Detected PG pulses were input when the Inverter was outputting a frequency (soft start output ≥ E1-09).	There is a break in the PG wiring.	Fix the broken/disconnected wiring.
		The PG is wired incorrectly.	Fix the wiring.
		Power isn't being supplied to the PG.	Supply power to the PG properly.
		-	Check for open circuit when using brake (motor).
dEv	Excessive Speed Deviation The speed deviation has been greater than the setting in F1-10 for longer than the setting in F1-11.	The load is too heavy.	Reduce the load.
		The acceleration time and deceleration time are too short.	Lengthen the acceleration time and deceleration time.
		The load is locked.	Check the mechanical system.
		The settings in F1-10 and F1-11 aren't appropriate.	Check the settings in F1-10 and F1-11.
		-	Check for open circuit when using brake (motor).
CF	Control Fault The torque limit was reached continuously for 3 seconds or longer during a deceleration stop during open-loop vector control.	-	Check the motor constants.
FbL	PID Feedback Reference Lost A PID feedback reference loss was detected (b5-12 = 2) and the PID feedback input was less than b5-13 (PID feedback loss detection level) for longer than the time set in b5-14 (PID feedback loss detection time).	-	-
EF0	External fault input from Communications Option Card	-	Check the Communications Option Card and communications signals.
EF3	External fault (Input terminal 3)	An "external fault" was input from a multi-function input terminal (S3 to S7).	• Reset external fault inputs to the multi-function inputs. • Remove the cause of the external fault.
EF4	External fault (Input terminal 4)		
EF5	External fault (Input terminal 5)		
EF6	External fault (Input terminal 6)		
EF7	External fault (Input terminal 7)		
oPr	Digital Operator Connection Fault The connection to the Digital Operator was broken during operation for a RUN command from the Digital Operator.	-	Check the connection to the Digital Operator.

Table 7.1 Fault Displays and Processing (Continued)

Display	Meaning	Probable Causes	Corrective Actions
CE	MEMOBUS Communications Error A normal reception was not possible for 2 s or longer after control data was received once.	-	Check the communications devices and communications signals.
bUS	Option Communications Error A communications error was detected during a run command or while setting a frequency reference from a Communications Option Card.	-	Check the communications devices and communications signals.
CPF00	Digital Operator Communications Error 1 Communications with the Digital Operator were not established within 5 seconds after the power was turned on.	The Digital Operator's connector isn't connected properly.	Disconnect the Digital Operator and then connect it again.
		The Inverter's control circuits are faulty.	Replace the Inverter.
	CPU External RAM Fault	-	Try turning the power supply off and on again.
		The control circuits were destroyed.	Replace the Inverter.
CPF01	Digital Operator Communications Error 2 After communications were established, there was a communications error with the Digital Operator for more than 2 seconds.	The Digital Operator isn't connected properly.	Disconnect the Digital Operator and then connect it again.
		The Inverter's control circuits are faulty.	Replace the Inverter.
CPF02	Base block circuit error	-	Try turning the power supply off and on again.
		The control circuit is damaged.	Replace the Inverter.
CPF03	EEPROM error	-	Try turning the power supply off and on again.
		The control circuit is damaged.	Replace the Inverter.
CPF04	CPU internal A/D converter error	-	Try turning the power supply off and on again.
		The control circuit is damaged.	Replace the Inverter.
CPF05	CPU internal A/D converter error	-	Try turning the power supply off and on again.
		The control circuit is damaged.	Replace the Inverter.
CPF06	Option Card connection error	The Option Card is not connected properly.	Turn off the power and insert the Card again.
		The Inverter or Option Card is faulty.	Replace the Option Card or the Inverter.
CPF07	ASIC internal RAM fault	-	Try turning the power supply off and on again.
		The control circuit is damaged.	Replace the Inverter.

Table 7.1 Fault Displays and Processing (Continued)

Display	Meaning	Probable Causes	Corrective Actions
CPF08	Watchdog timer fault	-	Try turning the power supply off and on again.
		The control circuit is damaged.	Replace the Inverter.
CPF09	CPU-ASIC mutual diagnosis fault	-	Try turning the power supply off and on again.
		The control circuit is damaged.	Replace the Inverter.
CPF 10	ASIC version fault	The Inverter control circuit is faulty	Replace the Inverter.
CPF20	Communications Option Card A/D converter error	The Option Card is not connected properly.	Turn off the power and insert the Card again.
		The Option Card's A/D converter is faulty.	Replace the Communications Option Card.
CPF21	Communications Option Card self diagnostic error	Communications Option Card fault.	Replace the Option Card.
CPF22	Communications Option Card model code error		
CPF23	Communications Option Card DPRAM error		

◆ Alarm Detection

Alarms are detected as a type of Inverter protection function that do not operate the fault contact output. The system will automatically returned to its original status once the cause of the alarm has been removed.

The Digital Operator display flashes and the alarm is output from the multi-function outputs (H2-01 to H2-03).

When an alarm occurs, take appropriate countermeasures according to the table below.

Table 7.2 Alarm Displays and Processing

Display	Meaning	Probable causes	Corrective Actions
EF (blinking)	Forward/Reverse Run Commands Input Together Both the forward and reverse run commands have been ON for more than 0.5 s.	-	Check the sequence of the forward and reverse run commands. Since the rotational direction is unknown, the motor will be decelerated to a stop when this minor fault occurs.
Uv (blinking)	Main Circuit Under voltage The following conditions occurred when there was no Run signal. • The main circuit DC voltage was below the Under voltage Detection Level Setting (L2-05). • The surge current limiting contactor opened. • The control power supply voltage was below the CUV level.	See causes for UV1, UV2, and UV3 faults in the previous table.	See corrective actions for UV1, UV2, and UV3 faults in the previous table.
ov (blinking)	Main Circuit Over voltage The main circuit DC voltage exceeded the over voltage detection level. 200 V class: Approx. 400 V 400 V class: Approx. 800 V	The power supply voltage is too high.	Decrease the voltage so it's within specifications.
oH (blinking)	Cooling Fin Overheating The temperature of the Inverter's cooling fins exceeded the setting in L8-02.	The ambient temperature is too high.	Install a cooling unit.
		There is a heat source nearby.	Remove the heat source
		The Inverter cooling fan has stopped.	Replace the cooling fan. (Contact your Yaskawa representative.)
oH2 (blinking)	Inverter Overheating Pre-alarm An OH2 alarm signal (Inverter overheating alarm signal) was input from a multi-function input terminal (S3 to S7).	-	Clear the multi-function input terminal's overheating alarm input.
oH3 (blinking)	Motor overheating E was set for H3-09 and the motor temperature thermistor input exceeded the alarm detection level.	The motor has overheated.	Check the size of the load and the length of the acceleration, deceleration, and cycle times.
			Check the V/f characteristics.
			Check the motor temperature input on terminals A1 and A2.

Table 7.2 Alarm Displays and Processing (Continued)

Display	Meaning	Probable causes	Corrective Actions
oL3 (blinking)	Over torque 1 There has been a current greater than the setting in L6-02 for longer than the setting in L6-03.	-	• Make sure that the settings in L6-02 and L6-03 are appropriate. • Check the mechanical system and correct the cause of the over torque.
oL4 (blinking)	Over torque 2 There has been a current greater than the setting in L6-05 for longer than the setting in L6-06.	-	• Make sure that the current setting in L6-05 and time setting in L6-06 are appropriate. • Check the mechanical system and correct the cause of the over torque.
UL3 (blinking)	Under torque 1 There has been a current less than the setting in L6-02 for longer than the setting in L6-03.	-	• Make sure that the settings in L6-02 and L6-03 are appropriate. • Check the mechanical system and correct the cause of the over torque.
UL4 (blinking)	Under torque 2 There has been a current less than the setting in L6-05 for longer than the setting in L6-06.	-	• Make sure that the current setting in L6-05 and time setting in L6-06 are appropriate. • Check the mechanical system and correct the cause of the over torque.
oS (blinking)	Overspeed The speed has been greater than the setting in F1-08 for longer than the setting in F1-09.	Overshooting/undershooting are occurring.	Adjust the gain again.
		The reference speed is too high.	Check the reference circuit and reference gain.
		The settings in F1-08 and F1-09 aren't appropriate.	Check the settings in F1-08 and F1-09.
PGo (blinking)	The PG is disconnected The Inverter is outputting a frequency, but PG pulses aren't being input.	There is a break in the PG wiring.	Fix the broken/disconnected wiring.
		The PG is wired incorrectly.	Fix the wiring.
		Power isn't being supplied to the PG.	Supply power to the PG properly.
dEv (blinking)	Excessive Speed Deviation The speed deviation has been greater than the setting in F1-10 for longer than the setting in F1-11.	The load is too large.	Reduce the load.
		The acceleration time and deceleration time are too short.	Lengthen the acceleration time and deceleration time.
		The load is locked.	Check the mechanical system.
		The settings in F1-10 and F1-11 aren't appropriate.	Check the settings in F1-10 and F1-11.
EF0	External error detected for Communications Card other than SI-K2 Continuing operation was specified for EF0 (F6-03 = 3)and an external fault was input from the Option Card.	-	Remove the cause of the external fault.

Table 7.2 Alarm Displays and Processing (Continued)

Display	Meaning	Probable causes	Corrective Actions
EF3 (blinking)	External fault (Input terminal S3)	An external fault was input from a multi-function input terminal (S3 to S7).	• Reset external fault inputs to the multi-function inputs. • Remove the cause of the external fault.
EF4 (blinking)	External fault (Input terminal S4)		
EF5 (blinking)	External fault (Input terminal S5)		
EF6 (blinking)	External fault (Input terminal S6)		
EF7 (blinking)	External fault (Input terminal S7)		
FbL (blinking)	PID Feedback Reference Lost A PID feedback reference loss was detected (b5-12 = 2) and the PID feedback input was less than b5-13 (PID feedback loss detection level) for longer than the time set in b5-14 (PID feedback loss detection time).	-	-
CE (blinking)	MEMOBUS Communications Error Normal reception was not possible for 2 s or longer after received control data.	-	Check the communications devices and signals.
bUS (blinking)	Option Card Communications Error A communications error occurred in a mode where the run command or a frequency reference is set from an Communications Option Card.	-	Check the communications devices and signals.
CALL (blinking)	Communications on Standby Control data was not normally received when power was turned ON.	-	Check the communications devices and signals.

◆ Operation Errors

An operation error will occur if there is an invalid setting or a contradiction between two constant settings. It won't be possible to start the Inverter until the constants have been set correctly. (The alarm output and fault contact outputs will not operate either.)

When an operation error has occurred, refer to the following table to identify and correct the cause of the errors.

Table 7.3 Operation Error Displays and Incorrect Settings

Display	Meaning	Incorrect settings
oPE01	Incorrect Inverter capacity setting	The Inverter capacity setting doesn't match the Unit. (Contact your Yaskawa representative.)
oPE02	Constant setting range error	The constant setting is outside of the valid setting range.
oPE03	Multi-function input selection error	One of the following errors has been made in the multi-function input (H1-01 to H1-06) settings: • The same setting has been selected for two or more multi-function inputs. • An up or down command was selected independently. (They must be used together.) • The up/down commands (10 and 11) and Accel/Decel Ramp Hold (A) were selected at the same time. • Speed Search 1 (61, maximum output frequency) and Speed Search 2 (62. set frequency) were selected at the same time. • External Base block NO (8) and External Base block NC (9) were selected at the same time. • The up/down commands (10 and 11) were selected while PID Control Mode Selection (b5-01) was enabled. • The Multi-function Analog Input Terminal (A2) Function Selection (H3-09) was set to a value other than 1F and the Terminal 13/14 Switch (1F) was selected, but the Terminal A1/A2 Switching (H3-13) was set to use the main speed frequency for A2 (H3-13 = 1). • Positive and negative speed commands have not been set at the same time. • The emergency stop command NO and NC have been set at the same time.
oPE05	Option Card selection error	The Option Card was selected as the frequency reference source by setting b1-01 to 3, but an Option Card isn't connected (C option).
oPE06	Control method selection error	V/f control with PG feedback was selected by setting A1-02 to 1, but a PG Speed Control Card isn't connected.
oPE07	Multi-function analog input selection error	The same setting has been selected for the analog input selection and the PID function selection. • H3-09 = B and H6-01 = 1 • H3-09 = C and H6-01 = 2 b1-01 (Reference Selection) is set to 4 (pulse input) and H6-01 (Pulse Train Input Function Selection) is set to a value other than 0 (frequency reference).
oPE08	Constant selection error	A setting has been made that is not required in the current control method. Ex.: A function used only with open loop vector control was selected for V/f control.
oPE09	PID control selection error	The following settings have been made at the same time. • b5-01 (PID Control Mode Selection) has been set to a value other than 0. • b5-15 (PID Sleep Function Operation Level) has been set to a value other than 0. • b1-03 (Stopping Method Selection) has been set to 2 or 3.

Table 7.3 Operation Error Displays and Incorrect Settings (Continued)

Display	Meaning	Incorrect settings
oPE 10	V/f data setting error	Constants E1-04, E1-06, E1-07, and E1-09 do not satisfy the following conditions: • E1-04 (FMAX) ≥ E1-06 (FA) > E1-07 (FB) ≥ E1-09 (FMIN) • E3-02 (FMAX) ≥ E3-04 (FA) > E3-05 (FB) ≥ E3-07 (FMIN)
oPE 11	Constant setting error	One of the following constant setting errors exists. • C6-05 (Carrier Frequency Gain) > 6, the Carrier Frequency Lower Limit (C6-04) > the Carrier Frequency Gain(C6-05) • Upper/lower limit error in C6-03 to 05. • C6-01 is 0 and C6-02 is 2 to E. • C6-01 is 1 and C6-02 is 7 to E.
Err	EEPROM write error	A verification error occurred when writing EEPROM. • Try turning the power supply off and on again. • Try setting the constants again.

◆ Errors During Auto tuning

The errors that can occur during auto tuning are given in the following table. If an error is detected, the motor will coast to a stop and an error code will be displayed on the Digital Operator. The error contact output and alarm output will not function.

Table 7.4 Errors During Auto tuning

Display	Meaning	Probable causes	Corrective Actions
Er-01	Motor data error	There is an error in the data input for auto tuning. There is an error in the relationship between the motor output and the motor rated current. The is an error between the no-load current setting and the input motor rated current (when auto tuning for only line-to-line resistance is performed for vector control).	• Check the input data. • Check the capacity of the Inverter and motor. • Check the motor rated current and no-load current.
Er-02	Alarm	A minor fault occurred during auto tuning (xxx).	• Check the input data. • Check wiring and the machine. • Check the load.
Er-03	STOP key input	The STOP Key was pressed to cancel auto tuning.	
Er-04	Line-to-line resistance error	Auto tuning was not completed in the specified time. The results of auto tuning has exceeded the setting range for a user constant.	• Check the input data. • Check motor wiring. • If the motor is connected to the machine, disconnect it. • If the setting of T1-03 is higher than the Inverter input power supply voltage for Er-08, change the input data.
Er-05	No-load current error		
Er-08	Rated slip error		
Er-09	Acceleration error (detected only for rotational auto tuning)	The motor did not accelerate in the specified time.	• Increase C1-01 (Acceleration Time 1). • Increase L7-01 and L7-02 (Reverse Torque Limits) if they are low. • If the motor is connected to the machine, disconnect it.
Er-11	Motor speed error (detected only for rotational auto tuning)	The torque reference was too high (100%) during acceleration (for open loop vector control only).	• If the motor is connected to the machine, disconnect it. • Increase C1-01 (Acceleration Time 1). • Check the input data (particularly the number of PG pulses and the number of motor poles).
Er-12	Current detection error	The current flow exceeded the motor rated current.	Check the current detection circuit, motor wiring, current detector, and installation methods.
		The detected current sign was the opposite of what it should be.	
		There is a phase fault for U, V, or W.	
Er-13	Leakage inductance error	Auto tuning was not completed in the specified time.	Check motor wiring.

Table 7.4 Errors During Auto tuning (Continued)

Display	Meaning	Probable causes	Corrective Actions
End1	V/f settings excessive*	The torque reference exceeded 100% and the no-load torque exceeded 70% during auto tuning.	• Check and correct the settings. • Disconnect the load from the motor.
End2	Motor core saturation error (detected only for rotational auto tuning)	Auto tuning for the motor core saturation value could not be completed in the specified time. The results of auto tuning has exceeded the setting range for a user constant so a temporary setting was made for the motor core saturation coefficient.	• Check the input data. • Check motor wiring. • If the motor is connected to the machine, disconnect it.
End3	Rated current setting alarm*	The rated current is set high.	Check the input data (particularly the motor output current and motor rated current).

* Displayed after auto tuning has been completed.

◆ Errors when Using the Digital Operator Copy Function

The errors that can occur when using the copy function from the Digital Operator are given in the following table. An error code will be displayed on the Digital Operator. If a Digital Operator key is pressed when an error code is being displayed, the display will be cleared and 03-01 will be displayed. The error contact output and alarm output will not function.

Table 7.5 Errors during Copy Function

Function	Display	Meaning	Probable causes	Corrective Actions
Read	PrE	Digital Operator write-protected	o3-01 was set to 1 to write a constant when the Digital Operator was write-protected (o3-02 = 0).	Set o3-02 to 1 to enable writing constants with the Digital Operator.
	iFE	Illegal read data	The read data length does not agree. The write data is incorrect.	Repeat the read. Check the Digital Operator cable. Replace the Digital Operator.
	rdE	Illegal write status	An attempted write of a constant to EEPROM on the Digital Writer failed.	A low Inverter voltage has been detected. Repeat the read. Replace the Digital Operator.

Table 7.5 Errors during Copy Function

Function	Display	Meaning	Probable causes	Corrective Actions
Copy	CPE	ID not matched	The Inverter product code or software number is different.	Use the copy function for the same product code and software number.
	uAE	Inverter capacity matched	The capacity of the Inverter being copied and the capacity in the Digital Operator are different.	Use the copy function for the same Inverter capacity.
	CrE	Control method matched	The control method of the Inverter being copied, and the control method in the Digital Operator are different.	Use the copy function for the same control method.
	CYE	Verify error	The constant written to the Inverter was compared with the constant in the Digital Operator, and they were different.	Retry the copy.
	CSE	Checksum error	The checksum in the Inverter constant area was compared with the checksum in the Digital Operator constant area, and they were different.	Retry the copy.

Troubleshooting

Due to constant setting errors, faulty wiring, and so on, the Inverter and motor may not operate as expected when the system is started up. If that should occur, use this section as a reference and apply the appropriate measures.

If the contents of the fault are displayed, refer to *Protective and Diagnostic Functions*.

◆ If Parameter Constants Cannot Be Set

Use the following information if Parameter Constants cannot be set.

■The display does not change when the Increment and Decrement Keys are pressed.

The following causes are possible.

The Inverter is operating (drive mode).

There are some constants that cannot be set during operation. Turn the Inverter off and then make the settings.

Constant write enable is input.

This occurs when "constant write enable" (set value: 1B) is set for a multi-function input terminal (H1-01 to H1-05). If the constant write enable input is OFF, the constants cannot be changed. Turn it ON and then set the constants.

Passwords do not match. (Only when a password is set.)

If the constant A1-04 (Password) and A1-05 (Password Setting) numbers are different, the constants for the initialize mode cannot be changed. Reset the password.

If you cannot remember the password, display A1-05 (Password Setting) by pressing the Reset/Select Key and the Menu Key simultaneously while in the A1-04 display. Then reset the password. (Input the new password in constant A1-04.)

■OPE01 through OPE11 is displayed.

The set value for the constant is wrong. Refer to *Operation Errors* in this chapter and correct the setting.

■CPF00 or CPF01 is displayed.

This is a Digital Operator communications error. The connection between the Digital Operator and the Inverter may be faulty. Remove the Digital Operator and then re-install it.

◆ If the Motor Does Not Operate

Use the following information if the motor does not operate.

■The motor does not operate when the RUN Key on the Digital Operator is pressed.

The following causes are possible.

IMPORTANT

If the Inverter is not in drive mode, it will remain in ready status and will not start. Press the Menu Key to make the DRIVE indicator flash, and enter the drive mode by pressing the DATA/ENTER Key. The DRIVE indicator will light when drive mode is entered.

The operation method setting is wrong.

If constant b1-02 (Operation Method Selection) is set to 1 (control circuit terminal), the motor will not operate when the Run Key is pressed. Either press the LOCAL/REMOTE Key* to switch to Digital Operator operation or set b1-02 to 0 (Digital Operator).

INFO

The LOCAL/REMOTE Key is enabled by setting o2-01 to 1 and disabled by setting o2-01 to 2. It is enabled when the drive mode is entered.

The frequency reference is too low.

If the frequency reference is set below the frequency set in E1-09 (Minimum Output Frequency), the Inverter will not operate.

Raise the frequency reference to at least the minimum output frequency.

There is a multi-function analog input setting error.

If multi-function analog input H3-09 is set to 1 (frequency gain), and if no voltage (current) is input, then the frequency reference will be zero. Check to be sure that the set value and analog input value are correct.

■The motor does not operate when an external operation signal is input.

The following causes are possible.

The Inverter is not in drive mode.

If the Inverter is not in drive mode, it will remain in ready status and will not start. Press the MENU Key make the DRIVE indicator flash, and enter the drive mode by pressing the DATA/ENTER Key. The DRIVE indicator will light when drive mode is entered.

The operation method selection is wrong.

If constant b1-02 (reference selection) is set to 0 (Digital Operator), the motor will not operate when an external operation signal is input. Set b1-02 to 1 (control circuit terminal) and try again.

Similarly, the motor will also not operate if the LOCAL/REMOTE Key has been pressed to switch to Digital Operator operation. In that case press the LOCAL/REMOTE Key* again to return to the original setting.

INFO

The LOCAL/REMOTE Key is enabled by setting o2-01 to 1 and disabled by setting o2-01 to 2. It is enabled when the drive mode is entered.

A 3-wire sequence is in effect.

The input method for a 3-wire sequence is different than when operating by forward/stop and reverse/stop (2-wire sequence). When 3-wire sequence is set, the motor will not operate even when an input terminal suitable for forward run/stop and reverse run/stop is turned ON.

When using a 3-wire sequence, refer to the timing chart and input the proper signals.

When using a 2-wire sequence, set the multi-function input terminal (H1-01 through H1-05, terminals S3 to S7) to a value other than 0.

The frequency reference is too low.

If the frequency reference is set below the frequency set in E1-09 (Minimum Output Frequency), the Inverter will not operate. Raise the frequency reference to at least the minimum output frequency.

There is a multi-function analog input setting error.

If multi-function analog inputs H3-05 and H3-09 are set to 1 (frequency gain), and if no voltage (current) is input, then the frequency reference will be zero. Check to be sure that the set value and analog input value are correct.

■The motor stops during acceleration or when a load is connected.

The load may be too heavy. The Inverter has a stall prevention function and an automatic torque boost function, but the motor responsiveness limit may be exceeded if acceleration is too rapid or if the load is too heavy. Lengthen the acceleration time or reduce the load. Also consider increasing the motor capacity.

■The motor only rotates in one direction.

"Reverse run prohibited" is selected. If b1-04 (Prohibition of Reverse Operation) is set to 1 (reverse run prohibited), the Inverter will not receive reverse run commands. To use both forward and reverse operation, set b1-04 to 0.

◆ If the Direction of the Motor Rotation is Reversed

If the motor operates in the wrong direction, the motor output wiring is faulty. When the Inverter T1(U), T2(V), and T3(W) are properly connected to the motor T1(U), T2(V), and T3(W), the motor operates in a forward direction when a forward run command is executed. The forward direction depends on the manufacturer and the motor type, so be sure to check the specifications.

The direction of rotation can be reversed by switching two wires among U, V, and W.

◆ If the Motor Does Not Put Out Torque or If Acceleration is Slow

Use the following information is the motor does not output torque or if acceleration is too slow.

■The torque limit has been reached.

When a torque limit has been set in constants L7-01 to L7-04, no torque will be output beyond that limit. This can cause the torque to be insufficient, or the acceleration time to be too long. Check to be sure that the value set for the torque limit is suitable.

If torque limits have been set for the multi-function analog input (H3-09 = 10 to 12 or 15), check to be sure that the analog input value is suitable.

■The stall prevention level during acceleration is too low.

If the value set for L3-02 (Stall Prevention Level during Acceleration) is too low, the acceleration time will be too long. Check to be sure that the set value is suitable.

■The stall prevention level during running is too low.

If the value set for L3-06 (Stall Prevention Level during Running) is too low, the speed will drop before outputting torque. Check to be sure that the set value is suitable.

■Auto tuning has not been performed for vector control

Vector control will not be perform if auto tuning has not been performed. Perform auto tuning separately for the motor, or set the motor constants through calculations. Alternatively, change the Control Method Selection (A1-02) to V/f control (0 or 1).

◆ If the Motor Operates Higher Than the Reference

Use the following information if the motor operates higher than the reference.

■The analog frequency reference bias setting is wrong (the gain setting is wrong).

The frequency reference bias set in constant H3-03 is added to the frequency reference. Check to be sure that the set value is suitable.

■A signal is being input to the frequency reference (current) terminal A1.

When 1F (frequency reference) is set for constant H3-09 (Multi-function Analog Input Terminal A2 Function Selection), a frequency corresponding to the terminal A2 input voltage (current) is added to the frequency reference. Check to be sure that the set value and analog input value are suitable.

◆ If the Slip Compensation Function Has Low Speed Precision

If speed control accuracy is low for the slip compensation function, the slip compensation limit has been reached. With the slip compensation function, compensation cannot be carried out beyond the slip compensation limit set in constant C3-03. Check to be sure that the set value is suitable.

◆ If There is Low Speed Control Accuracy at High-speed Rotation in Open-loop Vector Control Mode

The motor's rated voltage is high.

The Inverter's maximum output voltage is determined by its input voltage. (For example, if 200 VAC is input, then the maximum output voltage will be 200 VAC.) If, as a result of vector control, the output voltage reference value exceeds the Inverter output voltage maximum value, the speed control accuracy will decrease. Use a motor with a low rated voltage (i.e., a special motor for use with vector control), or change to flux vector control.

◆ If Motor Deceleration is Slow

Use the following information when the motor deceleration is slow.

■The deceleration time is long even when braking resistor is connected.

The following causes are possible.

"Stall prevention during deceleration enabled" is set.

When braking resistor is connected, set constant L3-04 (Stall Prevention Selection during Deceleration) to 0 (disabled) or 3 (with braking resistor). When this constant is set to 1 (enabled, the factory setting), braking resistor does not fully function.

The deceleration time setting is too long.

Check the deceleration time setting (constants C1-02, C1-04, C1-06, and C1-08).

Motor torque is insufficient.

If the constants are correct and there is no over voltage fault, then the motor's power is limited. Consider increasing the motor capacity.

The torque limit has been reached.

When a torque limit has been set in constants L7-01 to L7-04, no torque will be output beyond that limit. This can cause the deceleration time to be too long. Check to be sure that the value set for the torque limit is suitable.

If torque limits have been set for the multi-function analog input terminal A2 Function H3-09 (set value: 10 to 12 or 15), check to be sure that the analog input value is suitable.

■If the Vertical-axis Load Drops When Brake is Applied

The sequence is incorrect. The Inverter goes into DC injection braking status for 0.5 seconds after deceleration is completed. (This is the factory-set default.)

To ensure that the brake holds, set frequency detection 2 (H2-01 = 5) for the multi-function contact output terminals (M1 and Mw) so that the contacts will turn OFF when the output frequency is greater than L4-01 (3.0 to 5.0 Hz). (The contacts will turn ON below L4-01.)

There is hysteresis in frequency detection 2 (i.e., a frequency detection width, L4-02 = 2.0 Hz). Change the setting to approximately 0.5 Hz if there are drops during stop. Do not use the multi-function contact output run signal (H2-01 = 0) for the brake ON/OFF signal.

◆ If the Motor Overheats

Take the following steps if the motor overheats.

■The load is too big.

If the motor load is too heavy and the motor is used with the effective torque exceeding the motor's rated torque, the motor will overheat. Some motor rating are given for short period performance and are not continuous ratings. Reduce the load amount by either lightening the load or lengthening the acceleration/deceleration time. Also consider increasing the motor capacity.

■The ambient temperature is too high.

The motor rating is determined within a particular ambient operating temperature range. The motor will burn out if it is run continuously at the rated torque in an environment in which the maximum ambient operating temperature is exceeded. Lower the motor's ambient temperature to within the acceptable ambient operating temperature range.

■The withstand voltage between the motor phases is insufficient.

When the motor is connected to the Inverter output, a surge is generated between the Inverter switching and the motor coil. Normally the maximum surge voltage is three times the Inverter's input power supply voltage (i.e., 1,200 V for 400 V class). Be sure to use a motor with a withstand voltage between the motor phases that is greater than the maximum surge voltage. In particular, when using a 400 V class Inverter, use a special motor for Inverters.

■Auto tuning has not been performed for vector control

Vector control will not perform if auto tuning has not been performed. Perform auto tuning, or set the motor constants through calculations. Alternatively, change the Control Method Selection (A1-02) to V/f control (0 or 1).

◆ If There is Noise When the Inverter is Started or From an AM Radio

If noise is generated by Inverter switching, implement the following countermeasures:

- Change the Inverter's Carrier Frequency Selection (C6-02) to lower the carrier frequency. This will help to some extent by reducing the amount of internal switching.
- Install an Input Noise Filter at the Inverter's power supply input area.
- Install an Output Noise Filter at the Inverter's power supply output area.
- Use metal tubing. Electric waves can be shielded by metal, so encase the Inverter with metal (steel).
- Ground the Inverter and motor.
- Separate main circuit wiring from control wiring.

◆ If the Ground Fault Interrupter Operates When the Inverter is Run

The Inverter performs internal switching, so there is a certain amount of leakage current. This may cause the ground fault interrupter to operate and cut off the power supply. Change to a ground fault interrupter with a high leakage detection level (i.e., a sensitivity current of 200 mA or greater per Unit, with an operating time of 0.1 s or more), or one that incorporates high frequency countermeasures (i.e., one designed for use with Inverters). It will also help to some extent to change the Inverter's Carrier Frequency Selection (C6-02) to lower the carrier frequency. In addition, remember that the leakage current increases as the cable is lengthened.

◆ If There is Mechanical Oscillation

Use the following information when there is mechanical oscillation.

■The machinery is making unusual sounds.

The following causes are possible.

There may be resonance between the mechanical system's characteristic frequency and the carrier frequency.

If the motor is running with no problems and the machinery is oscillating with a high-pitched whine, it may indicate that this is occurring. To prevent this type of resonance, adjust the carrier frequency with constants C6-02 to C6-05.

There may be resonance between a machine's characteristic frequency and the output frequency of the Inverter.

To prevent this from occurring, either use the jump frequency functions in constants d3-01 to d3-04 or install rubber padding on the motor base to reduce oscillation.

■Oscillation and hunting are occurring with open-loop vector control.

The gain adjustment may be insufficient. Reset the gain to a more effective level by adjusting constants C4-02 (torque compensation time constant), C2-01 (S-curve Characteristic Time at Acceleration Start), and C3-02 (Slip Compensation Primary Delay Time) in order. Lower the gain setting and raise the primary delay time setting.

Vector control will not perform if auto tuning has not been performed. Perform auto tuning separately for the motor, or set the motor constants through calculations. Alternatively, change the control method selection (A1-02) to V/f control (0 or 1).

■Oscillation and hunting are occurring with V/f control.

The gain adjustment may be insufficient. Reset the gain to a more effective level by adjusting constants C4-02 (Torque Compensation Primary Delay Time Constant), N1-02 (Hunting Prevention Gain), and C3-02 (Slip Compensation Primary Delay Time) in order. Lower the gain setting and raise the primary delay time setting.

■Oscillation and hunting are occurring with V/f w/PG control.

The gain adjustment may be insufficient. Adjust the various types of speed control loop (ASR) gain.

If the oscillation cannot be eliminated in this way, set the hunting prevention selection (constant N1-01) to 0 (disabled) and then try adjusting the gain again.

■Oscillation and hunting are occurring with PID control.

If there is oscillation or hunting during PID control, check the oscillation cycle and individually adjust P, I, and D constants. (Refer to page 6-89.)

■Auto tuning has not been performed with vector control.

Vector control will not perform if auto tuning has not been performed. Perform auto tuning separately for the motor, or set the motor constants through calculations. Alternatively, change the Control Method Selection (A1-02) to V/f control.

◆ If the Motor Rotates Even When Inverter Output is Stopped

If the motor rotates even when the Inverter output is stopped, the DC injection braking is insufficient. If the motor continues operating at low speed, without completely stopping, and after a deceleration stop has been executed, it means that the DC injection braking is not decelerating enough. Adjust the DC injection braking as follows:

- Increase the constant b2-02 (DC Injection Braking Current) setting.
- Increase the constant b2-04 (DC Injection Braking (initial excitation) Time at Stop) setting.

◆ If 0 V is Detected When the Fan is Started, or Fan Stalls

Generation of 0 V (main circuit voltage) and stalling can occur if the fan is turning when it is started. The DC injection braking is insufficient when starting.

This can be prevented by slowing fan rotation by DC injection braking before starting the fan. Increase the constant b2-03 (DC injection braking time (initial excitation) at start) setting.

◆ If Output Frequency Does Not Rise to Frequency Reference

Use the following information if the output frequency does not rise to the frequency reference.

■The frequency reference is within the jump frequency range.

When the jump frequency function is used, the output frequency does not change within the jump frequency range. Check to be sure that the Jump Frequency (constants d3-01 to d3-03) and Jump Frequency Width (constant d3-04) settings are suitable.

■The frequency reference upper limit has been reached.

The output frequency upper limit is determined by the following formula:
Maximum Output Frequency (E1-04) × Frequency Reference Upper Limit (d2-01) / 100
Check to be sure that the constant E1-04 and d2-01 settings are suitable.

8

Maintenance and Inspection

This chapter describes basic maintenance and inspection for the Inverter

Maintenance and Inspection

◆ Outline of Maintenance

The maintenance period of the Inverter is as follows:

Maintenance Period: Within 18 months of shipping from the factory or within 12 months of being delivered to the final user, whichever comes first.

◆ Daily Inspection

Check the following items with the system in operation.

- The motor should not be vibrating or making unusual noises.
- There should be no abnormal heat generation.
- The ambient temperature should not be too high.
- The output current value shown on the monitor displays should not be higher than normal.
- The cooling fan on the bottom of the Inverter should be operating normally.

◆ Periodic Inspection

Check the following items during periodic maintenance.

Always turn OFF the power supply before beginning inspection. Confirm that the LED indicators on the front cover have all turned OFF, and then wait until at least five minutes has elapsed before beginning the inspection. Be sure not to touch terminals right after the power has been turned off. Doing so can result in electric shock.

Fig 8.1 Periodic Inspections

Item	Inspection	Corrective Procedure
External terminals, mounting bolts, connectors, etc.	Are all screws and bolts tight?	Tighten loose screws and bolts firmly.
	Are connectors tight?	Reconnect the loose connectors.
Cooling fins	Are the fins dirty or dusty?	Clean off any dirt and dust with an air gun using dry air at a pressure of 39.2×10^4 to 58.8×10^4 Pa (4 to 6 kg•cm^2).
PCBs	Is there any conductive dirt or oil mist on the PCBs?	Clean off any dirt and dust with an air gun using dry air at a pressure of 39.2×10^4 to 58.8×10^4 Pa (4 to 6 kg•cm^2). Replace the boards if they cannot be made clean.
Cooling fan	Is there any abnormal noise or vibration or has the total operating time exceeded 20,000 hours?	Replace the cooling fan.

Fig 8.1 Periodic Inspections

Item	Inspection	Corrective Procedure
Power elements	Is there any conductive dirt or oil mist on the elements?	Clean off any dirt and dust with an air gun using dry air at a pressure of 39.2 x 10^4 to 58.8 x 10^4 Pa (4 to 6 kg•cm^2).
Smoothing capacitor	Are there any irregularities, such as dis-coloration or odor?	Replace the capacitor or Inverter.

◆ Periodic Maintenance of Parts

The Inverter is configured of many parts, and these parts must be operating properly in order to make full use of the Inverter functions.

Among the electronic components, there are some that require maintenance depending on their usage conditions. In order to keep the Inverter operating normally over a long period of time, it is necessary to perform period inspections and replace parts according to their service life.

Periodic inspection standards vary depending the Inverter's installation environment and usage conditions. The Inverter's maintenance periods are noted below. Keep them as reference.

Fig 8.2 Part Replacement Guidelines

Part	Standard Replacement Period	Replacement Method
Cooling fan	2 to 3 years	Replace with new part.
Smoothing capacitor	5 years	Replace with new part. (Determine need by inspection.)
Breaker relays	-	Determine need by inspection.
Fuses	10 years	Replace with new part.
Aluminum capacitors on PCBs	5 years	Replace with new board. (Determine need by inspection.)

Note The standard replacement period is based on the following usage conditions:
Ambient temperature:Yearly average of 30°C
Load factor: 80% max.
Operating rate: 12 hours max. per day

◆ Cooling Fan Replacement Outline

■200 V and 400 V Class Inverters of 18.5 Kw or Less

A cooling fan is attached to the bottom of the Inverter.

If the Inverter is installed using the mounting holes on the back of the Inverter, the cooling fan can be replaced without removing the Inverter from the installation panel.

Removing the Cooling Fan

1. Press in on the right and left sides of the fan cover in the direction of arrows 1 and pull the fan out in the direction of arrow 2.
2. Pull out the cable connected to the fan from the fan cover and disconnect the relay connector.
3. Open the fan cover on the left and right sides and remove the fan cover from the fan.

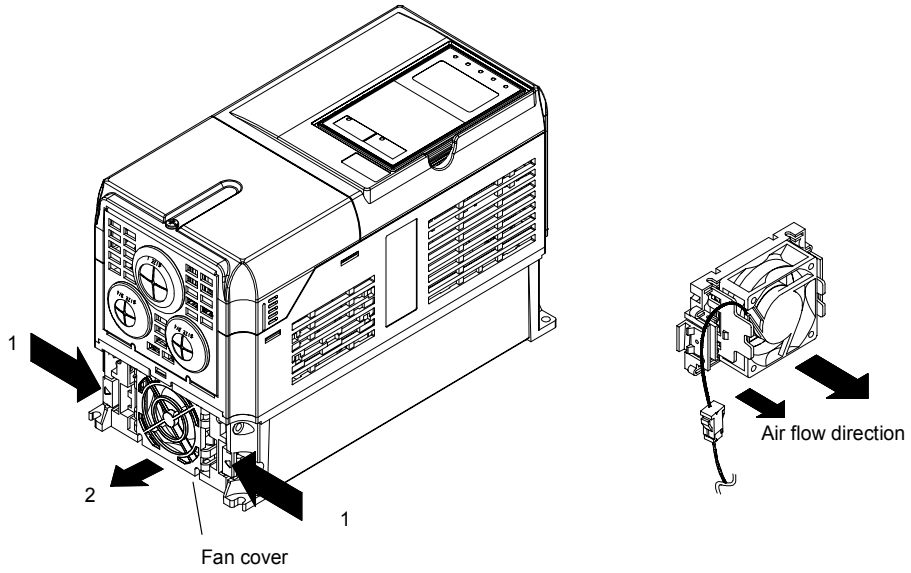

Fig 8.3 Cooling Fan Replacement (Inverters of 18.5 kW or Less)

Mounting the Cooling Fan

1. Attach the fan cover to the cooling fan. Be sure that the air flow direction indicated by the arrows above faces into the Inverter.
2. Connect the relay connector securely and place the relay connector and cable into the fan cover.
3. Mount the fan cover on the Inverter. Be sure that the tabs on the sides of the fan cover click into place on the Inverter.

■200 V and 400 V Class Inverters of 22 kW or More

A cooling fan is attached to the top panel inside the Inverter.

The cooling fan can be replaced without removing the Inverter from the installation panel.

Removing the Cooling Fan

1. Remove the terminal cover, Inverter cover, Digital Operator, and front cover from the front of the Inverter.
2. Remove the controller bracket to which the cards are mounted. Remove all cables connected to the controller.
3. Remove the cooling fan power cable connector (CN26 and CN27) from the gate driver positioned at the back of the controller.
4. Remove the fan cover screws and pull out the fan cover from the Inverter.
5. Remove the cooling fan from the fan cover.

Mounting the Cooling Fan

After attaching a new cooling fan, reverse the above procedure to attach all of the components.
When attaching the cooling fan to the mounting bracket, be sure that the air flow faces the top of the Inverter.

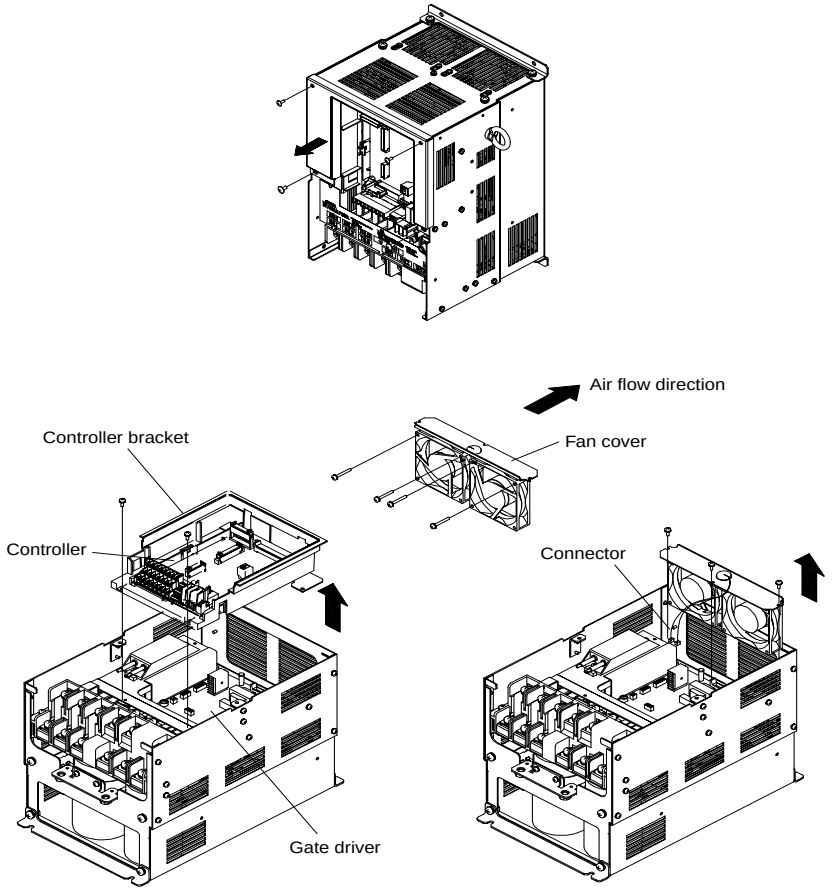

Fig 8.4 Cooling Fan Replacement (Inverters of 22 kW or More)

◆ Removing and Mounting the Control Circuit Terminal Card

The control circuit terminal card can be removed and mounted without disconnecting the cables.

IMPORTANT

Always confirm that the charge indicator is not lit before removing or mounting the control circuit terminal card.

■Removing the Control Circuit Terminal Card

1. Remove the Digital Operator and front cover.
2. Remove the connecting line connectors connected to FE and NC on the control circuit terminal card.
3. Loosen the mounting screws (1) on the left and right sides of the control terminals until they are free. (It is not necessary to remove these screws completely. They are self-rising.)
4. Pull the terminal card out sideways (in direction 2) with the screws sticking out from the card.

■Mounting the Control Circuit Terminal Card

Reverse the removal procedure to mount the terminal card.

Confirm that the terminal circuit card and the controller properly meet at connector CN5 before pressing in on the card.

The connector pins may be bent if the card is forced into place, possibly preventing correct Inverter operation.

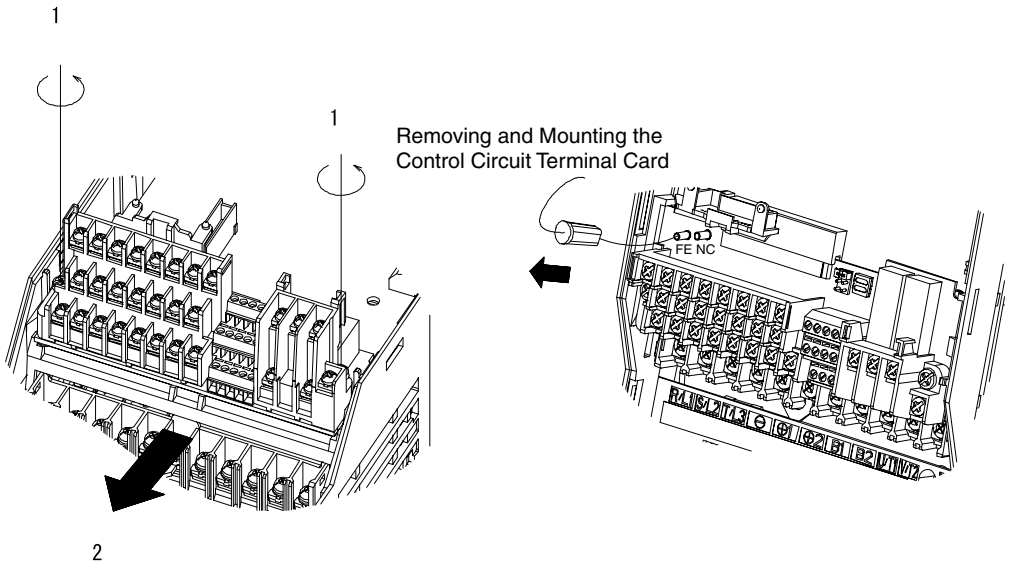

Fig 8.5 Removing the Control Circuit Terminal Card

9

Specifications

This chapter describes the basic specifications of the Inverter and specifications for options and peripheral devices.

Standard Inverter Specifications

The standard Inverter specifications are listed by capacity in the following tables.

◆ Specifications by Model

Specifications are given by model in the following tables.

■200V Class

Table 9.1 200 V Class Inverters

Model Number CIMR-F7A □			20P4	20P7	21P5	22P2	23P7	25P5	27P5	2011	2015	2018	2022	2030	2037	2045	2055	2075	2090	2110
Max. applicable motor output (kW)			0.4	0.75	1.5	2.2	3.7	5.5	7.5	11	15	18.5	22	30	37	45	55	75	90	110
Output ratings	Rated output capacity (kVA)		1.2	1.6	2.7	3.7	5.7	8.8	12	17	22	27	32	44	55	69	82	110	130	160
	Rated output current (A)		3.2	4.1	7.0	9.6	15	23	31	45	58	71	85	115	145	180	215	283	346	415
	Max. output voltage (V)		3-phase; 200, 208, 220, 230, or 240 VAC (Proportional to input voltage.)																	
	Max. output frequency (Hz)		CT selected (low carrier, constant torque applications): 150 Hz max. VT selected (high carrier, variable torque applications): 400 Hz max.																	
Power supply characteristics	Rated voltage (V) Rated frequency (Hz)		3-phase, 200/208/220/230/240 VAC, 50/60 Hz																	
	Allowable voltage fluctuation		+ 10%, - 15%																	
	Allowable frequency fluctuation		±5%																	
Control characteristics	Measures for power supply harmonics	DC reactor	Optional										Built in							
		12-phase rectification	Not possible										Possible*3							

* 1. The maximum applicable motor output is given for a standard 4-pole Yaskawa motor. When selecting the actual motor and Inverter, be sure that the Inverter's rated current is applicable for the motor's rated current.

* 2. The startup torque for a 200 V Class Inverter for 110 kW is 120% (low carrier).

* 3. A 3-wire transformer is required on the power supply for 12-phase rectification.

■400 V Class

Table 9.2 400 V Class Inverters

Model Number CIMR-F7A □			40P4	40P7	41P5	42P2	43P7	45P5	47P5	4011	4015	4018
Max. applicable motor output (kW) *1			0.4	0.75	1.5	2.2	3.7	5.5	7.5	11	15	18.5
Output ratings	Rated output capacity (kVA)		1.4	1.6	2.8	4.0	5.8	9.5	13	18	24	30
	Rated output current (A)		1.8	2.1	3.7	5.3	7.6	12.5	17	24	31	39
	Max. output voltage (V)		3-phase; 380, 400, 415, 440, 460, or 480 VAC (Proportional to input voltage.)									
	Max. output frequency (Hz)		CT selected (low carrier, constant torque applications): 150 Hz max. VT selected (high carrier, variable torque applications): 400 Hz max.									
Power supply characteristics	Rated voltage (V) Rated frequency (Hz)		3-phase, 380, 400, 415, 440, 460 or 480 VAC, 50/60 Hz									
	Allowable voltage fluctuation		+ 10%, - 15%									
	Allowable frequency fluctuation		±5%									
Control characteristics	Measures for power supply harmonics	DC reactor	Optional									
		12-phase rectification	Not possible									

Model Number CIMR-F7A □			4022	4030	4037	4045	4055	4075	4090	4110	4132	4160	4185	4220	4300
Max. applicable motor output (kW)*1			22	30	37	45	55	75	90	110	132	160	185	220	300
Output ratings	Rated output capacity (kVA)		34	46	57	69	85	110	140	160	200	230	280	390	510
	Rated output current (A)		45	60	75	91	112	150	180	216	260	304	370	506	675
	Max. output voltage (V)		3-phase, 380, 400, 415, 440, 460, or 480 VAC (Proportional to input voltage.)												
	Max. output frequency (Hz)		CT selected (low carrier, constant torque applications): 150 Hz max. VT selected (high carrier, variable torque applications): 400 Hz max.												
Power supply characteristics	Max. voltage (V) Rated frequency (Hz)		3-phase, 380, 400, 415, 440, 460, or 480 VAC, 50/60 Hz												
	Allowable voltage fluctuation		+ 10%, - 15%												
	Allowable frequency fluctuation		±5%												
Control characteristics	Measures for power supply harmonics	DC reactor	Built in												
		12-phase rectification	Possible*2												

* 1. The maximum applicable motor output is given for a standard 4-pole Yaskawa motor. When selecting the actual motor and Inverter, be sure that the Inverter's rated current is applicable for the motor's rated current.

* 2. A 3-wire transformer is required on the power supply for 12-phase rectification.

◆ Common Specifications

The following specifications apply to both 200 V and 400 V Class Inverters.

Table 9.3 Common Specifications

Model Number CIMR-F7A □		Specification
Control characteristics	Control method	Sine wave PWM Open loop vector control, V/f control, V/f with PG control (switched by constant setting)
	Torque characteristics	CT selected (low carrier, constant torque applications): 150% /0.5 Hz VT selected (high carrier, variable torque applications): 120%/0.5 Hz (Open loop vector control)
	Speed control range	1:100 (Open loop vector control)
	Speed control accuracy	±0.2% (25°C ± 10°C) (Open loop vector control)
	Speed control response	5 Hz (Open loop vector control)
	Torque limits	Provided (4 quadrant steps can be changed by constant settings.) (Open loop vector control)
	Torque accuracy	±5%
	Frequency control range	0.01 to 150 Hz (CT selected.), 0.01 to 400 Hz (VT selected.)
	Frequency accuracy (temperature characteristics)	Digital references: ± 0.01% (-10°C to +40°C)
		Analog references: ±0.1% (25°C ±10°C)
	Frequency setting resolution	Digital references: 0.01 Hz
		Analog references: 0.06 Hz/60 Hz (10 bit with no sign)
	Output frequency resolution	0.001 Hz
	Overload capacity and maximum current*2	CT selected (low carrier, constant torque applications): 150% of rated output current per minute*1 VT selected (high carrier, variable torque applications): 120% of rated output current per minute
	Frequency setting signal	0 to 10 V, 4 to 20 mA, pulse train
	Acceleration/Deceleration time	0.01 to 6000.0 s (4 selectable combinations of independent acceleration and deceleration settings)
	Braking torque	Approximately 20% (Approximately 125% with Braking Resistor option, braking transformer built into 200 V and 400 V Class Inverters for 18.5 kW or less.)
	Main control functions	Restarting for momentary power loss, speed searches, over torque detection, torque limits, 16-speed control (maximum), acceleration/deceleration time changes, S-curve acceleration/deceleration, 3-wire sequence, auto tuning (rotational or stationary), dwell functions, cooling fan ON/OFF control, slip compensation, torque compensation, jump frequencies, upper and lower limits for frequency references, DC braking for starting and stopping, high-slip braking, PID control (with sleep function), energy-saving control, MEMOBUS communications (RS-485/422, 19.2 kbps maximum), fault reset, and function copying.
Protective functions	Motor protection	Protection by electronic thermal overload relay.
	Instantaneous over current protection	Stops at approx. 200% of rated output current.
	Fuse blown protection	Stops for fuse blown.
	Overload protection	CT selected (low carrier, constant torque applications): 150% of rated output current per minute (except for 110 kW Inverters) VT selected (high carrier, variable torque applications): 120% of rated output current per minute
	Over voltage protection	200 Class Inverter: Stops when main-circuit DC voltage is above 410 V. 400 Class Inverter: Stops when main-circuit DC voltage is above 820 V.
	Under voltage protection	200 Class Inverter: Stops when main-circuit DC voltage is below 190 V. 400 Class Inverter: Stops when main-circuit DC voltage is below 380 V.
	Momentary power loss ride-thru	Stops for 15 ms or more. By selecting the momentary power loss method, operation can be continued if power is restored within 2 s.
	Cooling fin overheating	Protection by thermistor.
	Stall prevention	Stall prevention during acceleration, deceleration, or running.
	Grounding protection	Protection by electronic circuits. (Over current level)
	Charge indicator	Lit when the main circuit DC voltage is approx. 50 V or more.
Protective structure		Enclosed wall-mounted type (Type 1 (NEMA 1)): 18.5 kW or less (same for 200 V and 400 V class Inverters) Open chassis type (IP00): 22 kW or more (same for 200 V and 400 V class Inverters)
Environment	Ambient operating temperature	-10°C to 40°C (Enclosed wall-mounted type) 10°C to 45°C (Open chassis type)
	Ambient operating humidity	95% max. (with no condensation)
	Storage temperature	- 20°C to + 60°C (short-term temperature during transportation)
	Application site	Indoor (no corrosive gas, dust, etc.)
	Altitude	1000 m max.
	Vibration	10 to 20 Hz, 9.8 m/s^2 max.; 20 to 50 Hz, 2 m/s^2 max

Note Rotational auto tuning is required to obtain the specifications labeled as "open loop vector control."

* 1. Not including the 200 V Class Inverter for 110 kW and the 400 V Class Inverters for 220 and 300 kW.

* 2. Increase the Inverter capacity if loads exceeding these current values are expected.

Specifications of Options and Peripheral Devices

The following options and peripheral devices can be used for the Inverter. Select them according to the application.

Table 9.4 Options and Peripheral Devices

Purpose	Name	Model (Code)	Descriptions
Protect Inverter wiring	MCCB or Ground Fault Interrupter*	NF□	Always connect a breaker to the power supply line to protect Inverter wiring. Use a ground fault interrupter suitable for high frequencies.
Prevents burning when a Braking Resistor is used.	Magnetic Contactor	HI-□J	Install to prevent the braking resistor from burning out when one is used. Always attach a surge absorber to the coil.
Contains switching surge	Surge Absorber	DCR2-□	Absorbs surge from the magnetic contactor and control relays. Connect surge absorbers to all magnetic contactors and relays near the Inverter.
Isolates I/O signals	Isolator	DGP□	Isolates the I/O signals of the Inverter and is effective against inductive noise.
Improve the input power factor of the Inverter	DC Reactor AC Reactor	UZDA-□ UZBA-□	Used to improve the input power factor of the Inverter. All Inverters of 22 kW or higher contain built-in DC reactors. These are optional for Inverters of 18.5 kW or less. Install DC and AC reactors for applications with a large power supply capacity (600 kVA or higher).
Reduce the affects of radio and control device noise	Input Noise Filter	(Single phase) LNFB-□ (3 phase) LNFD-□HF□	Reduces noise coming into the inverter from the power supply line and to reduce noise flowing from the inverter into the power supply line. Connect as close to the Inverter as possible.
	Finemet zero-phase reactor to reduce radio noise	F6045GB (FIL001098) F11080GB (FIL001097)	Reduces noise from the line that sneaks into the Inverter input power system. Insert as close to the Inverter as possible. Can be use on both the input side and output side.
	Output Noise Filter	LF-□	Reduces noise generated by the Inverter. Connect as close to the Inverter as possible.
Enable stopping the machine in a set time	Braking Resistor	ERF-150WJ□□ (R00□□□□)	Consumes the regenerative motor energy with a resistor to reduce deceleration time (use rate: 3% ED).
	Braking Resistor Unit	LKEB-□ (75600-K□□□0)	Consumes the regenerative motor energy with a resistor to reduce deceleration time (use rate: 10% ED).
	Braking Unit	CDBR-□ (72600-R□□□0)	Used with a Braking Resistor Unit to reduce the deceleration time of the motor.
Operates the Inverter externally	VS Operator (small plastic Operator)	JVOP-95•□ (73041-0905X-□)	Allows frequency reference settings and ON/OFF operation control to be performed by analog references from a remote location (50 m max.). Frequency counter specifications: 60/120 Hz, 90/180Hz
	VS Operator (Standard steel-plate Operator)	JVOP-96•□ (73041-0906X-□)	Allows frequency reference settings and ON/OFF operation control to be performed by analog references from a remote location (50 m max.). Frequency counter specifications: 75 Hz, 150 Hz, 220 Hz
	Digital Operator Connection Cable	1 m cable: (72616-W5001) 3 m cable: (72616-W5003)	Extension cable to use a Digital Operator remotely. Cable length: 1 m or 3 m
Controls an Inverter system	VS System Module	JGSM-□	A system controller that can be match to the automatic control system to produce an optimum system configuration.
Provides Inverter momentary power loss recovery time	Momentary Power Loss Recovery Unit	P00□0 (73600-P00□0)	Handles momentary power losses for the control power supply for models 2.2 kW or less (maintains power for 2 s).
Set/monitor frequencies and voltages externally.	Frequency Meter	DCF-6A	Devices to set or monitor frequencies externally.
	Frequency Setter	RV30YN20S (2 kΩ)	
	Frequency Setter Knob	CM-3S	
	Output Voltmeter	SCF-12NH	Measures the output voltage externally and designed for use with a PWM Inverter.

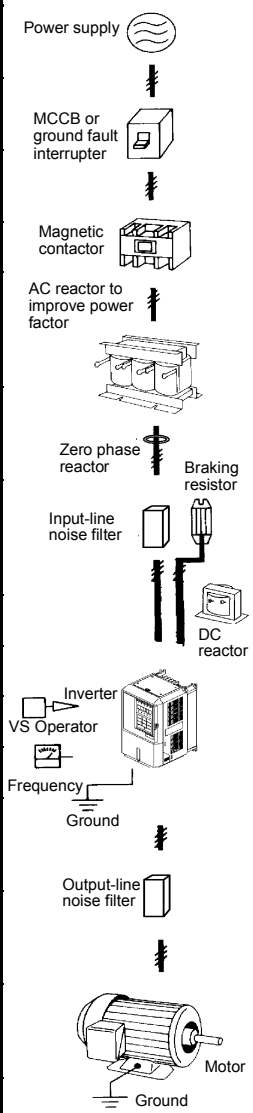

Table 9.4 Options and Peripheral Devices

Purpose	Name	Model (Code)	Descriptions
Correct frequency reference input, frequency meter, ammeter scales	Variable Resistor Board for Frequency Reference	2 kΩ (ETX003270) 20 kΩ (ETX003120)	Connected to the control circuit terminals to input a frequency reference.
	Frequency Meter Scale Correction Resistor	(RH000850)	Calibrates the scale of frequency meters and ammeters.

* Use a ground fault interrupter with a current sensitivity of 200 mA minimum and an operating time of 0.1 s minimum to prevent operating errors. The interrupter must be suitable for high-frequency operation.
Example: NV series by Mitsubishi Electric Corporation (manufactured in or after 1988)
EG, SG series by Fuji Electric Co., Ltd. (manufactured in or after 1984)

The following Option Cards are available

Table 9.5 Option Cards

Type		Name	Code Number	Function	Document Number
Built-in (connect to connector)	Monitoring Optional Cards	Analog Monitor Card AO-08	73600-D001X	Converts analog signals to monitor the Inverter's output status (output frequency, output current, etc.) to absolute values and outputs them. • Output resolution: 8 bits (1/256) • Output voltage: 0 to +10 V (not insulated) • Output channels: 2 channels	TO-C736-30.21
		Analog Monitor Card AO-12	73600-D002X	Output analog signals to monitor the Inverter's output status (output frequency, output current, etc.). • Output resolution: 11 bits (1/2048) + sign • Output voltage: -10 to +10 V (not insulated) • Output channels: 2 channels	TO-C736-30.22
		Digital Output Card DO-08	73600-D004X	Outputs isolated digital signals to monitor the Inverters operating status (alarm signals, zero speed detection, etc.) Output form: Photo coupler output, 6 channels (48 V, 50 mA max.) Relay contact outputs, 2 channels (250 VAC: 1 A max., 30VDC: 1 A max.)	TO-C736-30.24
		2C-Relay Output Card DO-02C	73600-D007X	Provides two multi-function outputs (DPDT relay contacts) in addition to those provided by the Inverter.	TO-C736-40.8
	PG Speed Control Cards	PG-A2	73600-A012X	Used for V/f with PG control. Speed feedback is performed using the PG attached to the motor to compensate for speed fluctuations caused by slipping. • A-phase pulse (single pulse) input (voltage, complementary, open-collector input) • Maximum input frequency: 32767 Hz • Pulse monitor output: +12 V, 20 mA (PG power supply output: +12 V, 200 mA max.)	TO-C736-40.1
		PG-B2	73600-A013X	• Used for V/f control. • A-, B-phase input (complimentary input) • Maximum input frequency: 32767 Hz • Pulse monitor output: Open-collector (PG power supply output: +12 V, 200 mA max.)	TO-C736-40.2
		PG-D2	73600-A014X	• Differential input. • A-phase pulse (differential pulse) input, for V/f control • Maximum input frequency: 300 kHz • Input: Conforms to RS-422 • Pulse monitor output: RS-422 (PG power supply output: +5 or +12 V, 200 mA max.)	TO-C736-40.3
		PG-X2	73600-A015X	• A-, B-, Z-phase pulse (differential pulse) input • Maximum input frequency: 300 kHz • Input: Conforms to RS-422 • Pulse monitor output: RS-422 (PG power supply output: +5 or +12 V, 200 mA max.)	TO-C736-40.4

Table 9.5 Option Cards (Continued)

Type		Name	Code Number	Function	Document Number
Built-in (connected to connector)	Communications Option Cards	DeviceNet Communications Interface Card SI-N	73600-C021X	Used to communicate with an Inverter from a host computer using DeviceNet communications to start/stop Inverter operation, read/set parameters, and read/set monitor constants (output frequencies, output currents, etc.).	-
		ProfiBus-DP Communications Interface Card SI-P	73600-C022X	Used to communicate with an Inverter from a host computer using ProfiBus-DP communications to start/stop Inverter operation, read/set parameters, and read/set monitor constants (output frequencies, output currents, etc.).	-
		InterBus-S Communications Interface Card SI-R	*	Used to communicate with an Inverter from a host computer using InterBus-S communications to start/stop Inverter operation, read/set parameters, and read/set monitor constants (output frequencies, output currents, etc.).	-
		CANopen Communications Interface Card SI-S	*	Used to communicate with an Inverter from a host computer using CANopen communications to start/stop Inverter operation, read/set parameters, and read/set monitor constants (output frequencies, output currents, etc.).	-
		ControlNet Communications Interface Card SI-U	*	Used to communicate with an Inverter from a host computer using ControlNet communications to start/stop Inverter operation, read/set parameters, and read/set monitor constants (output frequencies, output currents, etc.).	-
		CC-Link Communications Interface Card SI-C	73600-C032X	Used to communicate with an Inverter from a host computer using CC-Link communications to start/stop Inverter operation, read/set parameters, and read/set monitor constants (output frequencies, output currents, etc.).	-

* Under development.

10

Appendix

This chapter provides precautions for the Inverter, motor, and peripheral devices and also provides lists of constants.

Inverter Application Precautions

This section provides precautions for selecting, installing, setting, and handling Inverters.

◆ Selection

Observe the following precautions in selecting an Inverter.

■Installing Reactors

A large peak current will flow in the power input circuit when the Inverter is connected to a large-capacity power transformer (600 kVA or higher) or when switching a phase capacitor. Excessive peak current can destroy the convertor section. To prevent this, install a DC or AC reactor (optional) to improve the power supply power factor.

DC reactors are built into 200 V class Inverters of 22 to 110 kW and 400 V class Inverters of 22 to 300 kW.

If a thyristor convertor, such as a DC drive, is connected in the same power supply system, connect a DC or AC reactor regardless of the power supply conditions shown in the following diagram.

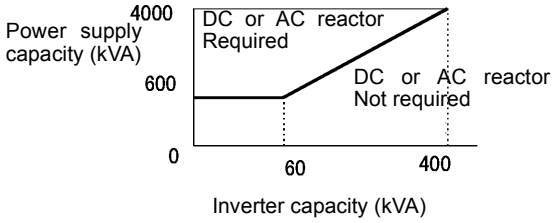

Fig 10.1

■Inverter Capacity

When connecting special motors or multiple motors in parallel to an Inverter, select the Inverter capacity so that the rated output current of the Inverter is 1.1 times the sum of all the motor rated currents.

■Initial Torque

The startup and acceleration characteristics of the motor are restricted by the overload current ratings of the Inverter that is driving the motor. The torque characteristics are generally less than those required when starting using a normal commercial power supply. If a large initial torque is required, select an Inverter with a somewhat larger capacity or increase the capacity of both the motor and the inverter.

■Emergency Stop

Although the Inverter's protective functions will stop operation when a fault occurs, the motor will not stop immediately. Always provide mechanical stop and protection mechanisms on equipment requiring an emergency stop.

■Options

Terminals B1, B2, ⊖, ⊕1, ⊕2, ⊕3 are for connecting only the options specifically provided by Yaskawa. Never connect any other devices to these terminals.

◆ Installation

Observe the following precautions when installing an Inverter.

■Installation in Enclosures

Either install the Inverter in a clean location not subject to oil mist, air-bourne matter, dust, and other contaminants, or install the Inverter in a completely enclosed panel. Provide cooling measures and sufficient panel space so that the temperature surrounding the Inverter does not go beyond the allowable temperature. Do not install the Inverter on wood or other combustible materials.

■Installation Direction

Mount the Inverter vertically to a wall or other horizontal surface.

◆ Settings

Observe the following precautions when making settings for an Inverter.

■Upper Limits

The Digital Operator can be used to set high-speed operation up to a maximum of 400 Hz (depends on the carrier frequency). Incorrect settings can be dangerous. Use the maximum frequency setting functions to set upper limits. (The maximum output frequency is factory-set to 60 Hz.)

■DC Injection Braking

The motor can overheat if the DC injection braking voltage or braking time is set to a large value.

■Acceleration/Deceleration Times

The motor's acceleration and deceleration times are determined by the torque generated by the motor, the load torque, and the load's inertial moment ($GD^2/4$). If the stall prevention functions are activated during acceleration or deceleration, increase the acceleration or deceleration time. The stall prevention functions will increase the acceleration or deceleration time by the amount of time the stall prevention function is active.

To reduce the acceleration or deceleration times, increase the capacity of the motor and Inverter.

◆ Handling

Observe the following precautions when wiring or performing maintenance for an Inverter.

■Wiring Check

The Inverter will be internally damaged if the power supply voltage is applied to output terminal U, V, or W. Check wring for any mistakes before supplying power. Check all wiring and sequences carefully.

■Magnetic Contactor Installation

Do not start and stop operation frequently with a magnetic contactor installed on the power supply line. Doing so can cause the Inverter to malfunction. Do not turn the Inverter ON and OFF with a magnetic contactor more than one time every 30 minutes.

■Maintenance and Inspections

After turning OFF the main circuit power supply, always confirm that the CHARGE indicator is not lit before performing maintenance or inspections. The voltage remaining in the capacitor may cause electric shock.

Motor Application Precautions

This section provides precautions for motor application.

◆ Using the Inverter for an Existing Standard Motor

When a standard motor is operated with the Inverter, power loss is slightly higher than when operated with a commercial power supply. Observe the following precautions when using an Inverter for an existing standard motor.

■Low Speed Ranges

Cooling effects diminish in the low-speed range, resulting in an increase in the motor temperature. Therefore, the motor torque should be reduced in the low-speed range whenever using a motor not made by Yaskawa. If 100% torque is required continuously at low speed, consider using a special inverter or vector motor.

■Installation Withstand Voltage

If the input voltage is high (440 V or higher) or the wiring distance is long, the motor insulation voltage must be considered. Contact your Yaskawa representative for details.

■High-speed Operation

When using the motor at a high speed (60 Hz or more), problems may arise in dynamic balance and bearing durability. Contact your Yaskawa representative for details.

■Torque Characteristics

The motor may require more acceleration torque when the motor is operated with the Inverter than when operated with a commercial power supply. Check the load torque characteristics of the machine to be used with the motor to set a proper V/f pattern.

■Vibration

The Inverter uses a high carrier PWM to reduce motor vibration. (A constant can be set to select low carrier, PWM modulation control as well.) When the motor is operated with the Inverter, motor vibration is almost the same as when operated with a commercial power supply.
Motor vibration may, however, become greater in the following cases.

Resonance with the Natural Frequency of the Mechanical System

Take special care when a machine that has been operated at a constant speed is to be operated in variable speed mode. If resonance occurs, install vibration-proof rubber on the motor base or use the jump frequency function to skip any frequency resonating the machine.

Imbalanced Rotor

Take special care when the motor is operated at a higher speed (60 Hz or more).

■Noise

Noise varies with the carrier frequency. At high carrier frequencies, the noise is almost the same when the motor is operated with a commercial power supply. Motor noise, however, becomes louder when the motor is operated at a speed higher than the rated speed (60 Hz).

◆ Using the Inverter for Special Motors

Observe the following precautions when using a special motor.

■Pole-changing Motor

The rated input current of pole-changing motors differs from that of standard motors. Select, therefore, an appropriate Inverter according to the maximum input current of the motor to be used. Before changing the number of poles, always make sure that the motor has stopped. Otherwise, the over voltage protective or over current protective mechanism will be actuated, resulting in an error.

■Submersible Motor

The rated input current of submersible motors is higher than that of standard motors. Therefore, always select an Inverter by checking its rated output current. When the distance between the motor and Inverter is long, use a cable thick enough to connect the motor and Inverter to prevent motor torque reduction.

■Explosion-proof Motor

When an explosion-proof motor is to be used, it must be subject to an explosion-proof test in conjunction with the Inverter. This is also applicable when an existing explosion-proof motor is to be operated with the Inverter. Since the Inverter itself is, however, not explosion-proof, always install it in a safe place.

■Gear motor

The speed range for continuous operation differs according to the lubrication method and motor manufacturer. In particular, continuous operation of an oil-lubricated motor in the low speed range may result in burning. If the motor is to be operated at a speed higher than 60 Hz, consult with the manufacturer.

■Synchronous Motor

A synchronous motor is not suitable for Inverter control. If a group of synchronous motors is individually turned ON and OFF, synchronism may be lost.

■Single-phase Motor

Do not use an Inverter for a single-phase motor. The motor should be replaced with a 3-phase motor.

◆ Power Transmission Mechanism (Speed Reducers, Belts, and Chains)

If an oil-lubricated gearbox or speed reducer is used in the power transmission mechanism, oil lubrication will be affected when the motor operates only in the low speed range. The power transmission mechanism will make noise and experience problems with service life and durability if the motor is operated at a speed higher than 60 Hz.

Wiring Examples

This section provides wiring examples to connect a Braking Unit and other peripheral devices to the main circuits, examples of wiring a transformer to Inverter I/O, and other aspects of Inverter wiring.

◆ Using a Braking Resistor Unit

This example shows wiring for a Braking Resistor Unit.

CIMR-F7A20P4 to -F7A2018 (200 V class Inverters of 0.4 to 18.5 kW)
CIMR-F7A40P4 to -F7A4018 (400 V class Inverters of 0.4 to 18.5 kW)

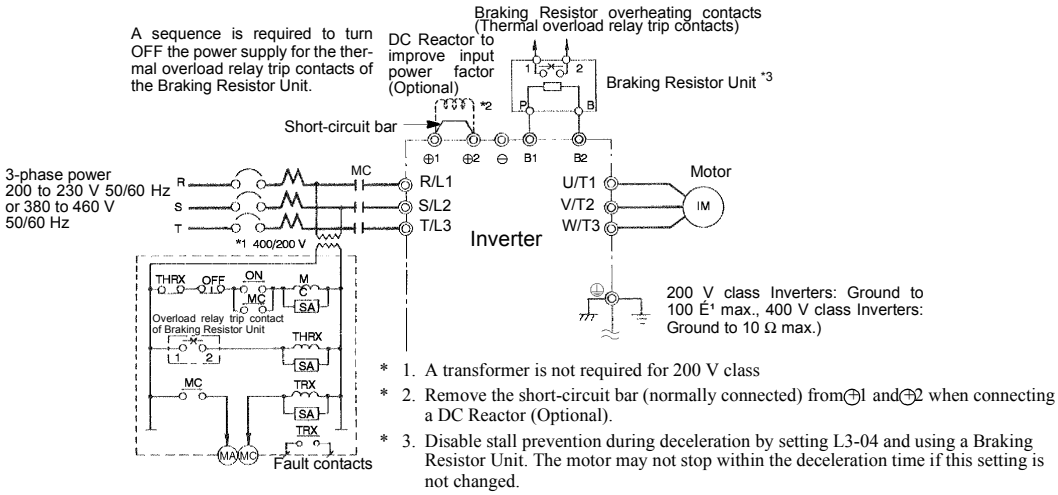

* 1. A transformer is not required for 200 V class

* 2. Remove the short-circuit bar (normally connected) from ⊕1 and ⊕2 when connecting a DC Reactor (Optional).

* 3. Disable stall prevention during deceleration by setting L3-04 and using a Braking Resistor Unit. The motor may not stop within the deceleration time if this setting is not changed.

Fig 10.2

◆ Using a Braking Unit and Braking Resistor Unit

This example shows wiring for a Braking Unit and Braking Resistor Unit.

CIMR-F7A2022, -F7A2030 (200 V class Inverters of 22 kW, 30 kW)

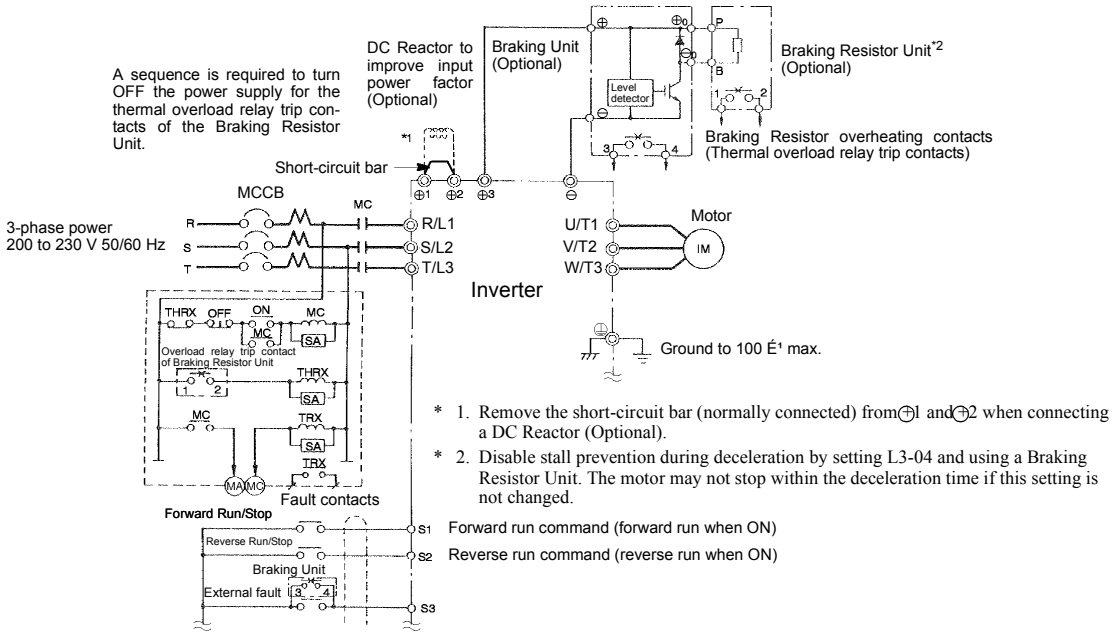
A sequence is required to turn OFF the power supply for the thermal overload relay trip contacts of the Braking Resistor Unit.
DC Reactor to improve input power factor (Optional)
Braking Unit (Optional)
Braking Resistor Unit*2 (Optional)
Level detector
Braking Resistor overheating contacts (Thermal overload relay trip contacts)
Short-circuit bar
MCCB
MC
3-phase power 200 to 230 V 50/60 Hz
R
S
T
R/L1
S/L2
T/L3
U/T1
V/T2
W/T3
Motor
IM
Inverter
Ground to 100 É¹ max.
THRX
OFF
ON
SA
Overload relay trip contact of Braking Resistor Unit
TRX
MA
Fault contacts
Forward Run/Stop
Reverse Run/Stop
Braking Unit
External fault
S1
S2
S3
* 1. Remove the short-circuit bar (normally connected) from ⊕1 and ⊕2 when connecting a DC Reactor (Optional).
* 2. Disable stall prevention during deceleration by setting L3-04 and using a Braking Resistor Unit. The motor may not stop within the deceleration time if this setting is not changed.
Forward run command (forward run when ON)
Reverse run command (reverse run when ON)

Fig 10.3

◆ Using Braking Units in Parallel

This example shows wiring for using two Braking Units in parallel.

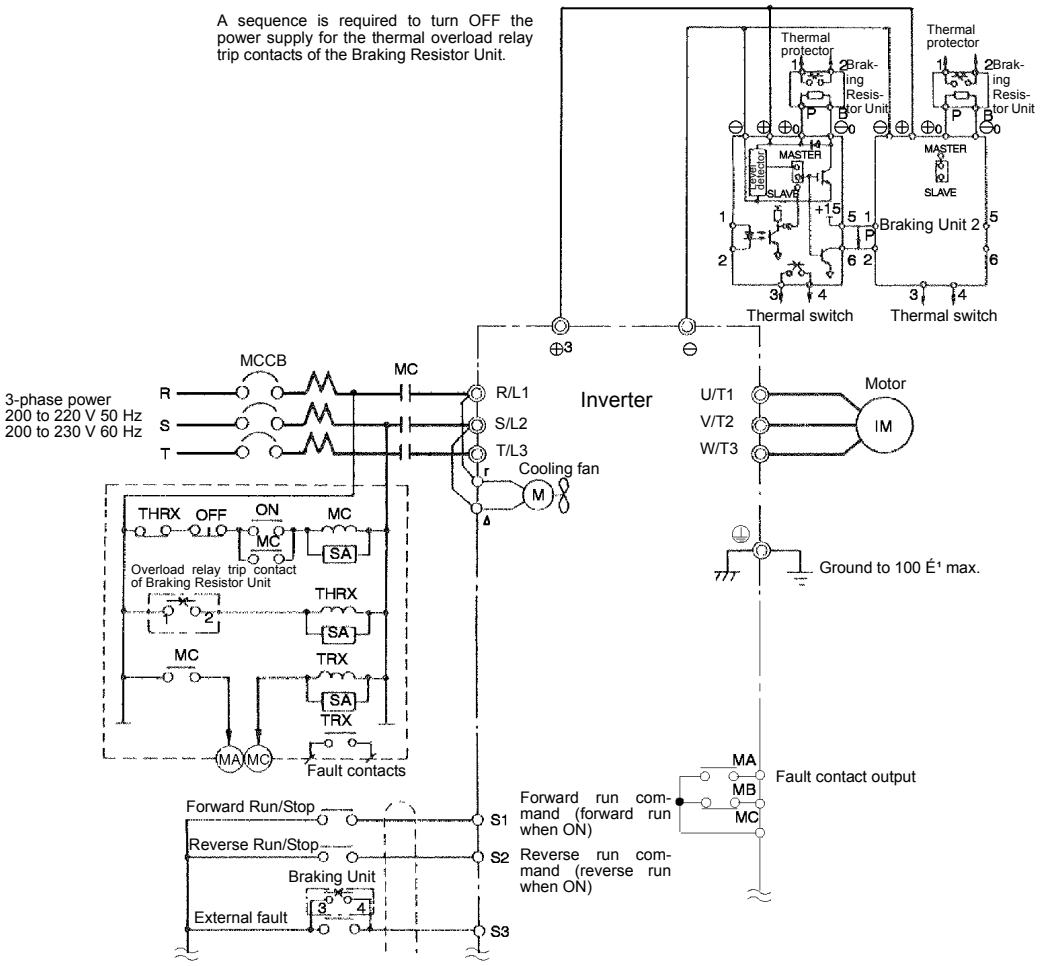

* Disable stall prevention during deceleration by setting L3-04 to Resistor Unit. The motor may not stop within the deceleration time if this setting is not changed.

Fig 10.4

◆ Using a Braking Unit and Three Braking Resistor Units in Parallel

This example shows wiring for using three Braking Resistor Units in parallel.

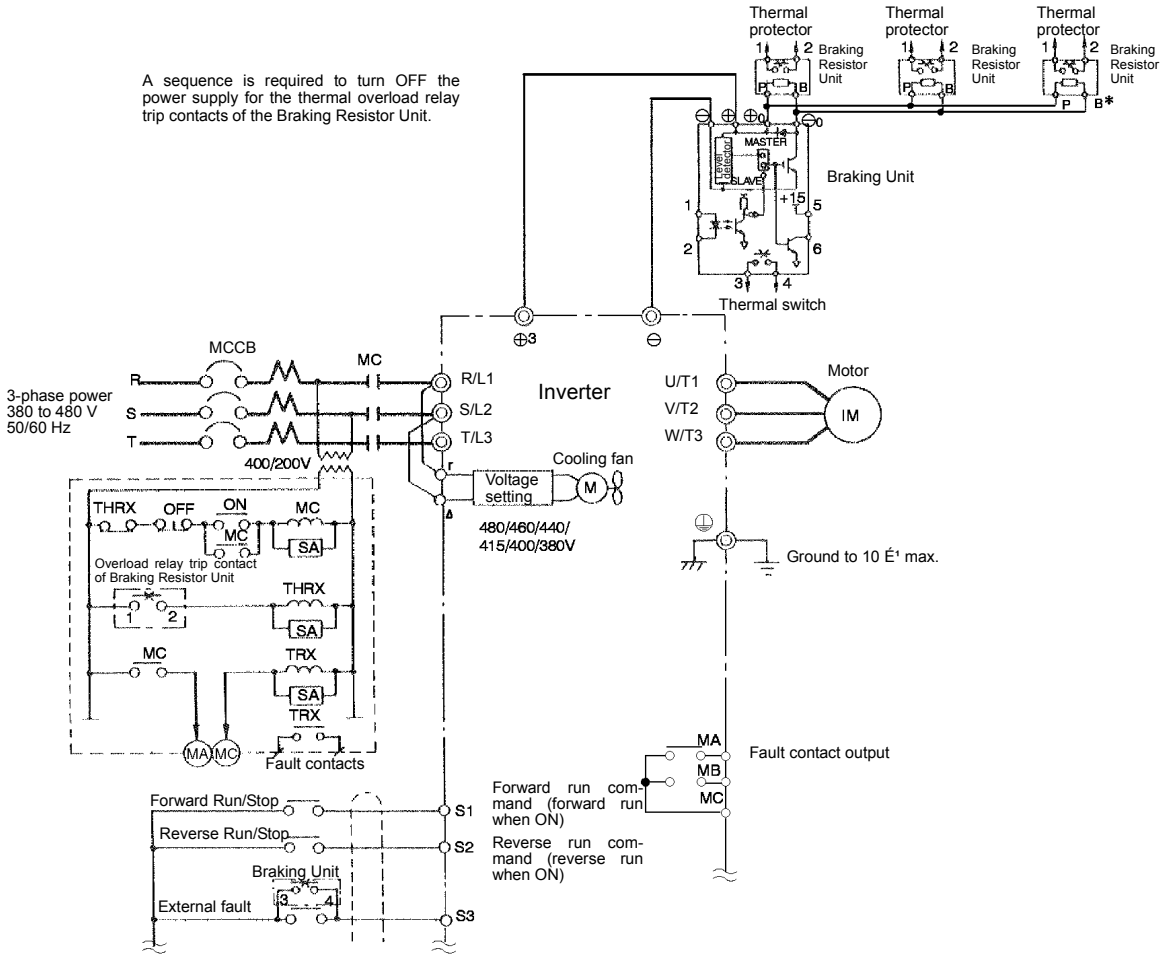

* Disable stall prevention during deceleration by setting L3-04 to Resistor Unit. The motor may not stop within the deceleration time if this setting is not changed.

Fig 10.5

◆ Using a VS Operator

This example shows wiring for using a VS Operator. The VS Operator model number is JVOP-95•□ or JVOP-96 •□.

CIMR-F7A27P5 (200 V class Inverters of 7.5 kW)

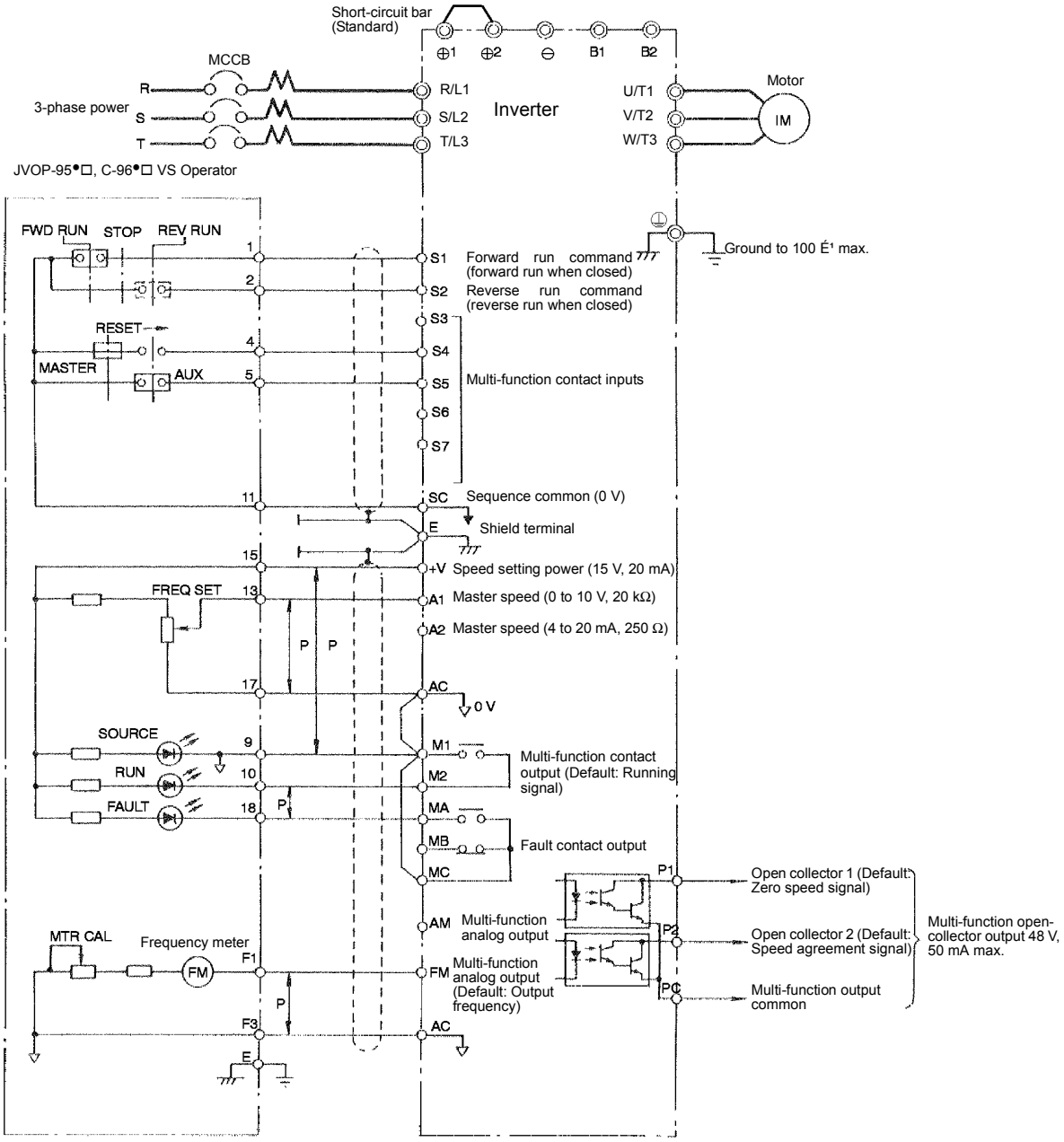

Fig 10.6

◆ Using Transistors for Input Signals and a 0-V Common in Sinking Mode with an Internal Power Supply

Set CN5 (shunt connector) on the control card to NPN as shown below for a sequence that uses an NPN transistor for an input signal (0-V command and sinking mode) and an internal +24-V power supply.

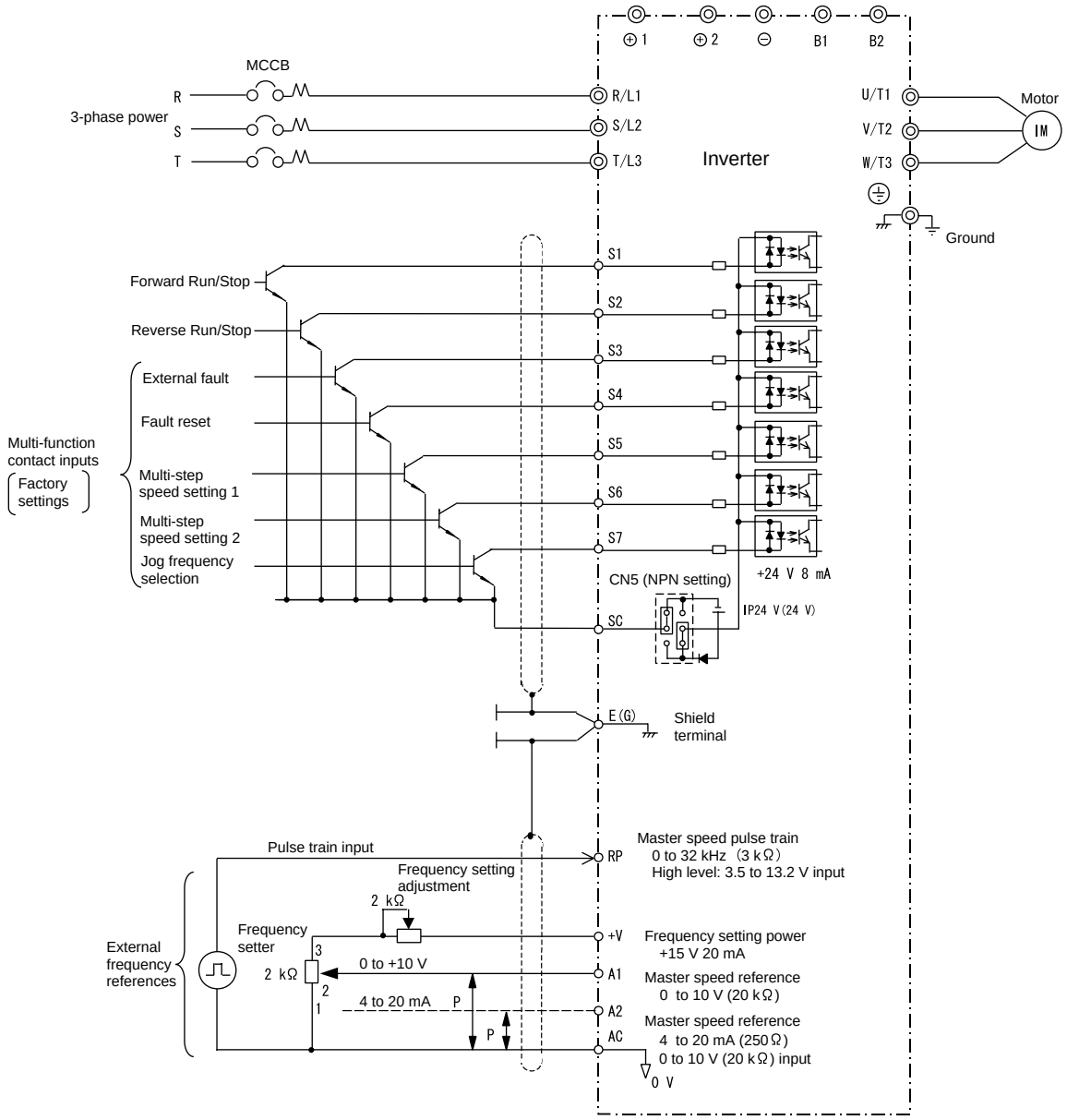

Fig 10.7

◆ Using Transistors for Input Signals and a 0-V Common in Sinking Mode with an External Power Supply

Set CN5 (shunt connector) on the control card to EXT as shown below for a sequence that uses an NPN transistor for an input signal (0-V command and sinking mode) and an external +24-V power supply.

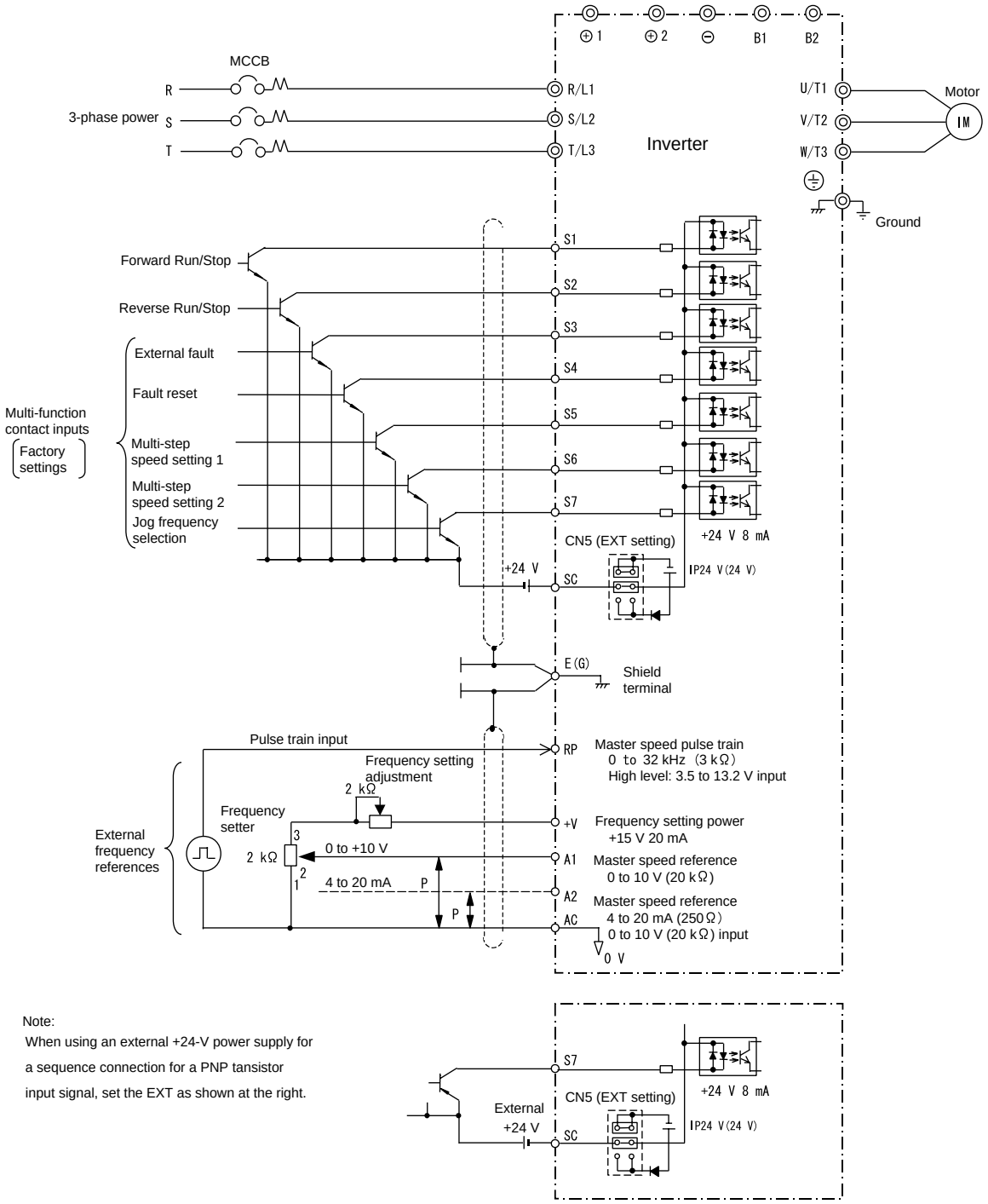

Fig 10.8

◆ Using Contact and Open Collector Outputs

This example shows wiring for contact outputs and open collector outputs.

The following example is for the CIMR-F7A27P5 (200 V Class Inverter for 7.5 kW).

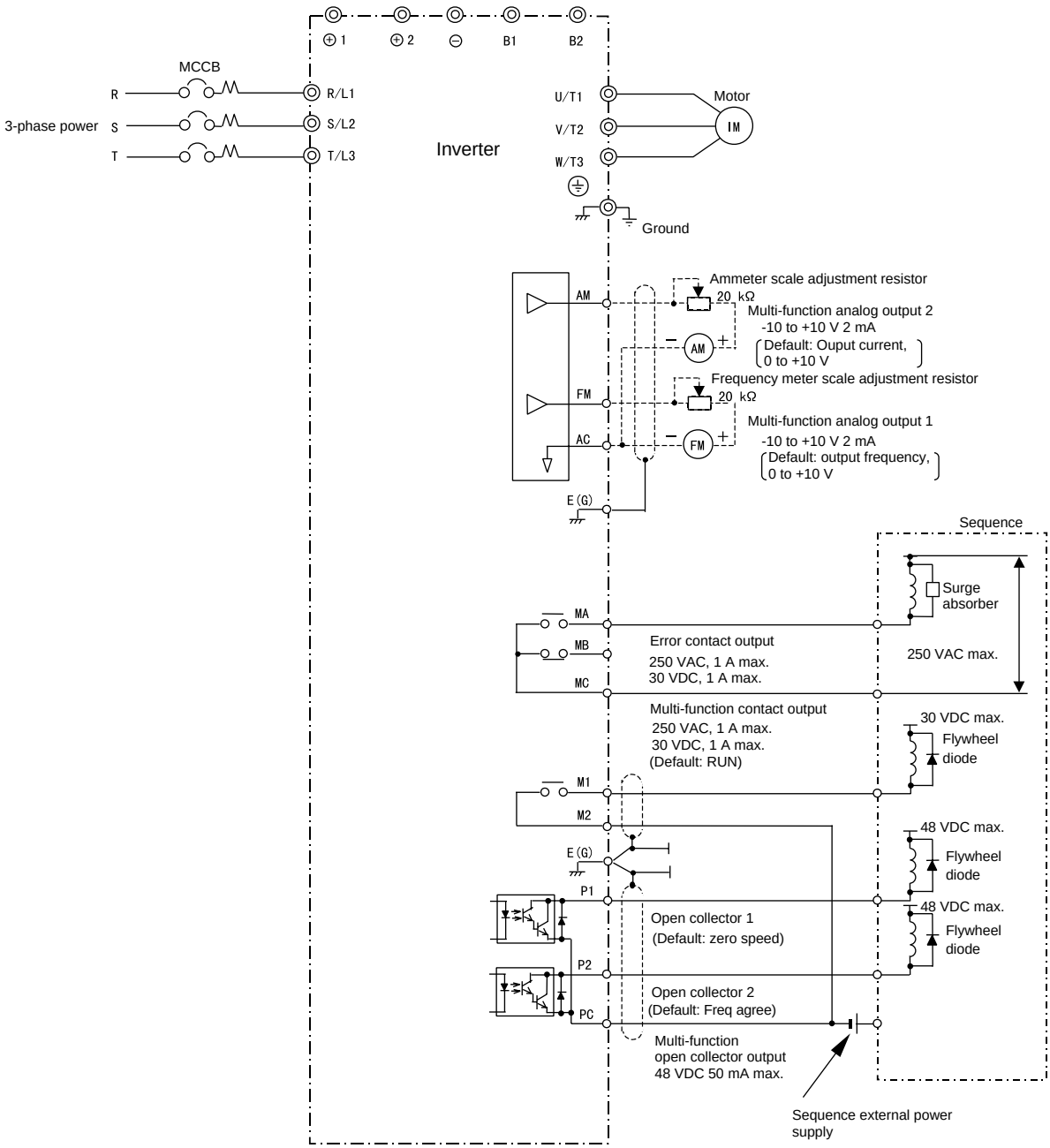

Fig 10.9

User Constants

Factory settings are given in the following table. These setting are for a 200 V Class Inverter of 0.4 kW set to factory set control method (open loop vector control).

Table 10.1 User Constants

No.	Name	Factory Setting	Setting	No.	Name	Factory Setting	Setting
A1-00	Language selection for digital operator display	1*1		b5-14	PID feedback command loss detection time	1.0	
A1-01	Constant access level	2		b5-15	PID sleep function operation level	0.0	
A1-02	Control method selection	0*1		b5-16	PID sleep operation delay time	0.0	
A1-03	Initialize	0		b5-17	Acceleration/deceleration time for PID reference	0.0	
A1-04	Password	0		b6-01	Dwell frequency at start	0.0	
A1-05	Password setting	0		b6-02	Dwell time at start	0.0	
A2-01 to A2-32	User setting constants	-		b6-03	Dwell frequency at stop	0.0	
b1-01	Reference selection	1		b6-04	Dwell time at stop	0.0	
b1-02	Operation method selection	1		b8-01	Energy-saving mode selection	0	
b1-03	Stopping method selection	0		b8-02	Energy-saving gain	0.7*4	
b1-04	Prohibition of reverse operation	0		b8-03	Energy-saving filter time constant	0.50*5	
b1-06	Read sequence input twice	1		b8-04	Energy-saving coefficient	*6	
b1-07	Operation selection after switching to remote mode	0		b8-05	Power detection filter time constant	20	
b1-08	Run command selection in programming modes	0		b8-06	Search operation voltage limiter	0	
b2-01	Zero speed level (DC injection braking starting frequency)	0.5		C1-01	Acceleration time 1	10.0	
b2-02	DC injection braking current	50		C1-02	Deceleration time 1	10.0	
b2-03	DC injection braking time at start	0.00		C1-03	Acceleration time 2	10.0	
b2-04	DC injection braking time at stop	0.50		C1-04	Deceleration time 2	10.0	
b3-01	Speed search selection	2*2 *3		C1-05	Acceleration time 3	10.0	
b3-02	Speed search operating current	100*2		C1-06	Deceleration time 3	10.0	
b3-03	Speed search deceleration time	2.0		C1-07	Acceleration time 4	10.0	
b3-05	Speed search wait time	0.2		C1-08	Deceleration time 4	10.0	
b4-01	Timer function ON-delay time	0.0		C1-09	Emergency stop time	10.0	
b4-02	Timer function OFF-delay time	0.0		C1-10	Accel/decel time setting unit	1	
b5-01	PID control mode selection	0		C1-11	Accel/decel time switching frequency	0.0	
b5-02	Proportional gain (P)	1.00		C2-01	S-curve characteristic time at acceleration start	0.20	
b5-03	Integral (I) time	1.0		C2-02	S-curve characteristic time at acceleration end	0.20	
b5-04	Integral (I) limit	100.0		C2-03	S-curve characteristic time at deceleration start	0.20	
b5-05	Derivative (D) time	0.00		C2-04	S-curve characteristic time at deceleration end	0.00	
b5-06	PID limit	100.0		C3-01	Slip compensation gain	0.0*3	
b5-07	PID offset adjustment	0.0		C3-02	Slip compensation primary delay time	2000*2	
b5-08	PID primary delay time constant	0.00		C3-03	Slip compensation limit	200	
b5-09	PID output characteristics selection	0		C3-04	Slip compensation selection during regeneration	0	

Table 10.1 User Constants (Continued)

No.	Name	Factory Setting	Setting	No.	Name	Factory Setting	Setting
b5-10	PID output gain	1.0		C3-05	Output voltage limit operation selection	0	
b5-11	PID reverse output selection	0		C4-01	Torque compensation gain	1.00	
b5-12	Selection of PID feedback command loss detection	0		C4-02	Torque compensation time constant	200*2	
b5-13	PID feedback command loss detection level	0		C5-01	ASR proportional (P) gain 1	0.20	
C5-02	ASR integral (I) time 1	0.200		E1-03	V/f pattern selection	F	
C5-03	ASR proportional (P) gain 2	0.02		E1-04	Max. output frequency	60.0	
C5-04	ASR integral (I) time 2	0.050		E1-05	Max. voltage	200.0 *2 *7	
C5-05	ASR limit	5.0		E1-06	Base frequency	60.0*2	
C6-01	CT/VT selection	1		E1-07	Mid. output frequency	3.0*2	
C6-02	Carrier frequency selection	6*6		E1-08	Mid. output frequency voltage	15.0*2 *7	
C6-03	Carrier Frequency Upper Limit	15.0*6		E1-09	Min. output frequency	1.5*2	
C6-04	Carrier Frequency Lower Limit	15.0*6		E1-10	Min. output frequency voltage	9.0*2 *7	
C6-05	Carrier Frequency Proportional Gain	00		E1-11	Mid. output frequency 2	0.0*9	
D1-01	Frequency reference 1	0.00		E1-12	Mid. output frequency voltage 2	0.0*9	
D1-02	Frequency reference 2	0.00		E1-13	Base voltage	0.0*10	
D1-03	Frequency reference 3	0.00		E2-01	Motor rated current	1.90*6	
D1-04	Frequency reference 4	0.00		E2-02	Motor rated slip	2.90*6	
D1-05	Frequency reference 5	0.00		E2-03	Motor no-load current	1.20*6	
D1-06	Frequency reference 6	0.00		E2-04	Number of motor poles	4	
D1-07	Frequency reference 7	0.00		E2-05	Motor line-to-line resistance	9.842*6	
D1-08	Frequency reference 8	0.00		E2-06	Motor leak inductance	18.2*6	
D1-09	Frequency reference 9	0.00		E2-07	Motor iron saturation coefficient 1	0.50	
D1-10	Frequency reference 10	0.00		E2-08	Motor iron saturation coefficient 2	0.75	
D1-11	Frequency reference 11	0.00		E2-10	Motor iron loss for torque compensation	14*4	
D1-12	Frequency reference 12	0.00		E2-11	Motor rated output	0.40*4	
D1-13	Frequency reference 13	0.00		E3-01	Motor 2 control method selection	0	
D1-14	Frequency reference 14	0.00		E3-02	Motor 2 max. output frequency (FMAX)	60.0*2	
D1-15	Frequency reference 15	0.00		E3-03	Motor 2 max. voltage (VMAX)	200.0*2	
D1-16	Frequency reference 16	0.00		E3-04	Motor 2 max. voltage frequency (FA)	60.0	
D1-17	Jog frequency reference	6.00		E3-05	Motor 2 mid. output frequency 1 (FB)	3.0 *2	
D2-01	Frequency reference upper limit	100.0		E3-06	Motor 2 mid. output frequency voltage 1 (VC)	11.0 *7	
D2-02	Frequency reference lower limit	0.0		E3-07	Motor 2 min. output frequency (FMIN)	0.5 *2	
D2-03	Master speed reference lower limit	0.0		E3-08	Motor 2 min. output frequency voltage (VMIN)	2.0 *7	
D3-01	Jump frequency 1	0.0		E4-01	Motor 2 rated current	1.90 *6	
D3-02	Jump frequency 2	0.0		E4-02	Motor 2 rated slip	2.90 *6	
D3-03	Jump frequency 3	0.0		E4-03	Motor 2 no-load current	1.20 *6	
D3-04	Jump frequency width	1.0		E4-04	Motor 2 number of poles (number of poles)	4	

Table 10.1 User Constants (Continued)

No.	Name	Factory Setting	Setting	No.	Name	Factory Setting	Setting
D4-01	Frequency reference hold function selection	0		E4-05	Motor 2 line-to-line resistance	9.842*6	
D4-02	+ - Speed limits	10		E4-06	Motor 2 leak inductance	18.2*6	
D6-01	Field weakening level	80		E4-07	Motor 2 rated capacity	0.40*6	
D6-02	Field frequency	0.0		F1-01	PG constant	600	
E1-01	Input voltage setting	200*7		F1-02	Operation selection at PG open circuit (PGO)	1	
F1-03	Operation selection at overspeed (OS)	1		H1-04	Terminal S6 function selection	4 (3)*8	
F1-04	Operation selection at deviation	3		H1-05	Terminal S7 function selection	6 (4)*8	
F1-05	PG rotation	0		H2-01	Terminal M1-M2 function selection (contact)	0	
F1-06	PG division rate (PG pulse monitor)	1		H2-02	Terminal P1 function selection (open collector)	1	
F1-07	Integral value during accel/decel enable/disable	0		H2-03	Terminal P2 function selection (open collector)	2	
F1-08	Overspeed detection level	115		H3-01	Gain (terminal A1)	0	
F1-09	Overspeed detection delay time	1.0		H3-02	Bias (terminal A1)	100.0	
F1-10	Excessive speed deviation detection level	10		H3-03	Multi-function analog input terminal A2 signal level selection	0.0	
F1-11	Excessive speed deviation detection delay time	0.5		H3-08	Multi-function analog input terminal A2 function selection	2	
F1-12	Number of PG gear teeth 1	0		H3-09	Multi-function analog input terminal A2 signal level selection	0	
F1-13	Number of PG gear teeth 2	0		H3-10	Gain (terminal A2)	100.0	
F1-14	PG open-circuit detection time	2.0		H3-11	Bias (terminal A2)	0.0	
F4-01	Channel 1 monitor selection	2		H3-12	Analog input filter time constant	0.00	
F4-02	Channel 1 gain	1.00		H3-13	Terminal A1/A2 switching	0	
F4-03	Channel 2 monitor selection	3		H4-01	Monitor selection (terminal FM)	2	
F4-04	Channel 2 gain	0.50		H4-02	Gain (terminal FM)	1.00	
F4-05	Channel 1 output monitor bias	0.0		H4-03	Bias (terminal FM)	0.0	
F4-06	Channel 2 output monitor bias	0.0		H4-04	Monitor selection (terminal AM)	3	
F4-07	Analog output signal level for channel 1	0		H4-05	Gain (terminal AM)	0.50	
F4-08	Analog output signal level for channel 2	0		H4-06	Bias (terminal AM)	0.0	
F5-01	Channel 1 output selection	0		H4-07	Analog output 1 signal level selection	0	
F5-02	Channel 2 output selection	1		H4-08	Analog output 2 signal level selection	0	
F5-03	Channel 3 output selection	2		H5-01	Station address	1F	
F5-04	Channel 4 output selection	4		H5-02	Communication speed selection	3	
F5-05	Channel 5 output selection	6		H5-03	Communication parity selection	0	
F5-06	Channel 6 output selection	37		H5-04	Stopping method after communication error	3	
F5-07	Channel 7 output selection	0F		H5-05	Communication error detection selection	1	
F5-08	Channel 8 output selection	0F		H5-06	Send wait time	5	
F5-09	DO-08 output mode selection	0		H5-07	RTS control ON/OFF	1	
F6-01	Operation selection after communications error	1		H6-01	Pulse train input function selection	0	
F6-02	Input level of external error from Communications Option Card	0		H6-02	Pulse train input scaling	1440	

Table 10.1 User Constants (Continued)

No.	Name	Factory Setting	Setting	No.	Name	Factory Setting	Setting
F6-03	Stopping method for external error from Communications Option Card	1		H6-03	Pulse train input gain	100.0	
F6-04	Trace sampling from Communications Option Card	0		H6-04	Pulse train input bias	0.0	
H1-01	Terminal S3 function selection	24		H6-05	Pulse train input filter time	0.10	
H1-02	Terminal S4 function selection	14		H6-06	Pulse train monitor selection	2	
H1-03	Terminal S5 function selection	3 (0)*8		H6-07	Pulse train monitor scaling	1440	
L1-01	Motor protection selection	1		L7-03	Forward regenerative torque limit	200	
L1-02	Motor protection time constant	1.0		L7-04	Reverse regenerative torque limit	200	
L1-03	Alarm operation selection during motor overheating	3		L8-01	Protect selection for internal DB resistor (Type ERF)	0	
L1-04	Motor overheating operation selection	1		L8-02	Overheat pre-alarm level	95	
L1-05	Motor temperature input filter time constant	0.20		L8-03	Operation selection after overheat pre-alarm	3	
L2-01	Momentary power loss detection	0		L8-05	Input open-phase protection selection	0	
L2-02	Momentary power loss ride-thru time	0.1*6		L8-07	Output open-phase protection selection	0	
L2-03	Min. base block time	0.1		L8-09	Ground protection selection	1	
L2-04	Voltage recovery time	0.3		L8-10	Cooling fan control selection	0	
L2-05	Under voltage detection level	190*7		L8-11	Cooling fan control delay time	60	
L2-06	KEB deceleration time	0.0		L8-12	Ambient temperature	45	
L2-07	Momentary recovery time	0*11		L8-15	OL2 characteristics selection at low speeds	1	
L2-08	Frequency reduction gain at KEB start	100		L8-19	Soft CLA selection	1	
L3-01	Stall prevention selection during accel	1		N1-01	Hunting-prevention function selection	1	
L3-02	Stall prevention level during accel	120		N1-02	Hunting-prevention gain	1.00	
L3-03	Stall prevention limit during accel	50		N2-01	Speed feedback detection control (AFR) gain	1.00	
L3-04	Stall prevention selection during decel	1		N2-02	Speed feedback detection control (AFR) time constant	50	
L3-05	Stall prevention selection during running	1		N2-03	Speed feedback detection control (AFR) time constant 2	750	
L3-06	Stall prevention level during running	120		N3-01	High-slip braking deceleration frequency width	5	
L4-01	Speed agreement detection level	0.0		N3-02	High-slip braking current limit	150	
L4-02	Speed agreement detection width	2.0		N3-03	High-slip braking stop dwell time	1.0	
L4-03	Speed agreement detection level (+/-)	0.0		N3-04	High-slip braking OL time	40	
L4-04	Speed agreement detection width (+/-)	2.0		o1-01	Monitor selection	6	
L4-05	Operation when frequency reference is missing	0		o1-02	Monitor selection after power up	1	
L5-01	Number of auto restart attempts	0		o1-03	Frequency units of reference setting and monitor	0	
L5-02	Auto restart operation selection	0		o2-01	LOCAL/REMOTE key enable/disable	1	
L6-01	Torque detection selection 1	0		o2-02	STOP key during control circuit terminal operation	1	
L6-02	Torque detection level 1	150		o2-03	User constant initial value	0	

Table 10.1 User Constants (Continued)

No.	Name	Factory Setting	Setting	No.	Name	Factory Setting	Setting
L6-03	Torque detection time 1	0.1		o2-04	kVA selection	0*6	
L6-04	Torque detection selection 2	0		o2-05	Frequency reference setting method selection	0	
L6-05	Torque detection level 2	150		o2-06	Operation selection when digital operator is disconnected	0	
L6-06	Torque detection time 2	0.1		o2-07	Cumulative operation time setting	0	
L7-01	Forward drive torque limit	200		o2-08	Cumulative operation time selection	0	
L7-02	Reverse drive torque limit	200		o2-10	Fan operation time setting	0	
o3-01	Copy function selection	0		T1-03	Motor rated voltage	200.0*7	
o3-02	Read permitted selection	0		T1-04	Motor rated current	1.90*6	
T1-00	Motor 1/2 selection	1		T1-05	Motor base frequency	60.00	
T1-01	Auto tuning mode selection	0		T1-06	Number of motor poles	4	
T1-02	Motor output power	0.40		T1-07	Motor base speed	1750	

* 1. Not initialized. (Japanese standard specifications: A1-01 = 1, A1-02 = 2)
* 2. The factory setting will change if the control method is changed. The factory settings given above are for V/f without PG control.
* 3. Factory setting depends on the control method (A1-02).
* 4. For V/f with PG control: 1.0
* 5. For Inverters with a capacity of 55 kW or more: 2.00
* 6. Setting range and initial setting depend on Inverter capacity.
* 7. Setting for 200 V class Inverters. For 400 V class Inverters, double the value.
* 8. Factory setting in the parentheses is for 3-wire sequence.
* 9. The contents is ignored if the setting is 0.0.
* 10.E1-13 will have the same value as E1-05 after auto tuning.
* 11.If the set value is 0, acceleration will be to the speeds for the acceleration times (C1-01 to C1-08)
* 12.The setting range is 10% to 200% of the Inverter rated output. (The value given is for a 200 V Class Inverter for 0.4 kW.)

YASKAWA

A World of Automation Solutions™

YASKAWA ELECTRIC AMERICA, INC.
Chicago-Corporate Headquarters 2121 Norman Drive South, Waukegan, IL 60085, U.S.A.
Phone: (847) 887-7000 Fax: (847) 887-7310 Internet: http://www.yaskawa.com

MOTOMAN INC.
805 Liberty Lane, West Carrollton, OH 45449, U.S.A.
Phone: (937) 847-6200 Fax: (937) 847-6277 Internet: http://www.motoman.com

YASKAWA ELECTRIC CORPORATION
New Pier Takeshiba South Tower, 1-16-1, Kaigan, Minatoku, Tokyo, 105-0022, Japan
Phone: 81-3-5402-4511 Fax: 81-3-5402-4580 Internet: http://www.yaskawa.co.jp

YASKAWA ELETRICO DO BRASIL COMERCIO LTDA.
Avenida Fagundes Filho, 620 Bairro Saude Sao Paolo-SP, Brasil CEP: 04304-000
Phone: 55-11-5071-2552 Fax: 55-11-5581-8795 Internet: http://www.yaskawa.com.br

YASKAWA ELECTRIC EUROPE GmbH
Am Kronberger Hang 2, 65824 Schwalbach, Germany
Phone: 49-6196-569-300 Fax: 49-6196-888-301

MOTOMAN ROBOTICS AB
Box 504 S38525, Torsas, Sweden
Phone: 46-486-48800 Fax: 46-486-41410

MOTOMAN ROBOTEC GmbH
Kammerfeldstraβe 1, 85391 Allershausen, Germany
Phone: 49-8166-900 Fax: 49-8166-9039

YASKAWA ELECTRIC UK LTD.
1 Hunt Hill Orchardton Woods Cumbernauld, G68 9LF, Scotland, United Kingdom
Phone: 44-12-3673-5000 Fax: 44-12-3645-8182

YASKAWA ELECTRIC KOREA CORPORATION
Paik Nam Bldg. 901 188-3, 1-Ga Euljiro, Joong-Gu, Seoul, Korea
Phone: 82-2-776-7844 Fax: 82-2-753-2639

YASKAWA ELECTRIC (SINGAPORE) PTE. LTD.
Head Office: 151 Lorong Chuan, #04-01, New Tech Park Singapore 556741, SINGAPORE
Phone: 65-282-3003 Fax: 65-289-3003

TAIPEI OFFICE (AND YATEC ENGINEERING CORPORATION)
10F 146 Sung Chiang Road, Taipei, Taiwan
Phone: 886-2-2563-0010 Fax: 886-2-2567-4677

YASKAWA JASON (HK) COMPANY LIMITED
Rm. 2909-10, Hong Kong Plaza, 186-191 Connaught Road West, Hong Kong
Phone: 852-2803-2385 Fax: 852-2547-5773

BEIJING OFFICE
Room No. 301 Office Building of Beijing International Club,
21 Jianguomanwai Avenue, Beijing 100020, China
Phone: 86-10-6532-1850 Fax: 86-10-6532-1851

SHANGHAI OFFICE
27 Hui He Road Shanghai 200437 China
Phone: 86-21-6553-6600 Fax: 86-21-6531-4242

SHANGHAI YASKAWA-TONJI M & E CO., LTD.
27 Hui He Road Shanghai 200437 China
Phone: 86-21-6533-2828 Fax: 86-21-6553-6677

BEIJING YASKAWA BEIKE AUTOMATION ENGINEERING CO., LTD.
30 Xue Yuan Road, Haidian, Beijing 100083 China
Phone: 86-10-6232-9943 Fax: 86-10-6234-5002

SHOUGANG MOTOMAN ROBOT CO., LTD.
7, Yongchang-North Street, Beijing Economic & Technological Development Area,
Beijing 100076 China
Phone: 86-10-6788-0551 Fax: 86-10-6788-2878

YEA, TAICHUNG OFFICE IN TAIWAIN
B1, 6F, No.51, Section 2, Kung-Yi Road, Taichung City, Taiwan, R.O.C.
Phone: 886-4-2320-2227 Fax:886-4-2320-2239

Yaskawa Electric America, Inc., March 2001 YEA-TOE-S616-55.1 Printed In U.S.A.